社団法人　電子情報通信学会
THE INSTITUTE OF ELECTRONICS,
INFORMATION AND COMMUNICATION ENGINEERS

信学技報
IEICE Technical Report
PN2011-26(2011-11)

Colorless, Directionless, Contentionless 機能を考慮した Add/Drop 分離型光ノードアーキテクチャ

山田 祥之　　長谷川 浩　　佐藤 健一

名古屋大学 大学院工学研究科 電子情報システム専攻 〒464-8603 愛知県名古屋市千種区不老町

E-mail: yo_yamad@echo.nuee.nagoya-u.ac.jp, {hasegawa, sato}@nuee.nagoya-u.ac.jp

あらまし 増え続けるトラフィックの効率的な収容と低消費電力化の要求を背景として，単一波長をパス(波長パス)として扱う一階層光パスネットワークの普及が進んでいる．近い将来予想されるトラフィックの爆発的な増加に対し，中継ノードにおける経路制御の効率化を目指し，複数波長パスを論理的に束ねた大容量パス(波長群パス)として扱う多階層光パスネットワークが検討されている．一階層並びに多階層光パスネットワークのいずれにおいても，光パスの始終端処理(add/drop 処理)に関わる光スイッチ規模はノード全体の光スイッチの多くを占める．本稿では，add/drop 処理に関わる光スイッチに波長群パス単位での処理を導入すると同時に，光パスの経路制御及び再構成処理を行うクロスコネクト部から当該機能を分離した新たなノードアーキテクチャを提案する．提案ノードアーキテクチャは，マトリクススイッチをベースとする add/drop 構成において，ノード全体のスイッチ規模の削減だけでなく，Colorless/Directionless/Contentionless 機能を提供する add/drop 用スイッチの規模を最小限に抑えることが可能となる．数値例により，従来の一階層光クロスコネクトに比べ，スイッチ規模が最大 45%削減されることを示す．

キーワード Colorless/Directionless/Contentionless，光ノードアーキテクチャ，多階層光パスネットワーク，波長群，波長群 add/drop 率

Optical Node Architectures with Separated Add/Drop Switches Considering Colorless, Directionless and Contentionless Capabilities

Yoshiyuki YAMADA　Hiroshi HASEGAWA　and　Ken-ichi SATO

Department of Electrical Engineering and Computer Science, Nagoya University
Furo-cho, Chikusa-ku, Nagoya, 464-8603 Japan

E-mail: yo_yamad@echo.nuee.nagoya-u.ac.jp, {hasegawa, sato}@nuee.nagoya-u.ac.jp

Abstract Deployment of single layer optical path networks that handle wavelength channels as a single entity is advancing because of continually traffic increase and low power consumption. Hierarchical optical path network that adopts waveband is recognized as a key technology to suppress the optical switch size and to meet the expected traffic expansion in the near future. For both single layer and hierarchical optical path networks, a large part of switches is devoted to realize add/drop operations for originating/terminating paths at nodes. In this paper, we propose new hierarchical optical node architectures that separate add/drop switches from the cross-connect part for routing and reconfiguration of optical paths. The proposed node architecture can not only reduce the total size of the cross-connect part but also minimize the add/drop switch scale for realizing colorless/directionless/contentionless capabilities by introducing a novel switch configuration based on waveband routing. Numerical results show that the proposed hierarchical node architecture can attain 45% switch size reduction at a maximum.

Keyword Colorless/Directionless/Contentionless, Optical Node Architecture, Hierarchical Optical Path Network, Waveband, Waveband Add/Drop Ratio

1. Introduction

The continual growth of traffic demand is evolving the optical network technologies due to their cost effectiveness and small energy consumption [1]. In the current optical cross-connect (OXC) and reconfigurable optical add/drop multiplexer (ROADM) systems, optical paths are switched at wavelength path granularity, which is called as single layer optical path network. New video-centric broadband services including ultra-high definition TV are advancing [2]. As a result, the traffic volume is expected to explode in the near future. This means the significant increase in the number of optical paths processed at each node, and increase in the switch scale. To cope with this situation, the hierarchical optical path network has been extensively investigated [3-5]. The hierarchical OXC (HOXC) introduces the waveband path (a bundle of multiple wavelength paths) as a higher-order optical path. It has been verified that a hierarchical optical path network with waveband routing can greatly reduce the total number of optical switch ports, and thus decrease the switch scale needed [3, 4].

The HOXC consists of waveband cross-connect (WBXC) that switches waveband paths and wavelength cross-connect (WXC) that handles wavelength paths [5-8]. Several studies provided HOXC node architectures and detailed analyses [6-8]. The substantial effectiveness of the HOXCs in terms of switch scale has been confirmed. This was verified for both the matrix-switch-based HOXC [6, 7], and the wavelength/waveband-selective-switch-based HOXC [8]. Recently, the hardware implementation of an 8x8 HOXC, each fiber of which carries 80 λ's, has been presented [9]. These studies clarified that the reduction in switch size strongly depends on the waveband add/drop ratio [6-8], i.e. the ratio of the number of added/dropped waveband paths to that of all outgoing/incoming waveband paths. However, further switch size reduction is desirable and it will be most effectively attained by the scale reduction of the WXC part, which is the dominant part of the current HOXC. We have already proposed an HOXC architecture that separately handles two categories of add/drop wavebands; originating/terminating and grooming [10]. The architecture can reduce the total switch size since added/dropped wavelength paths from/to the electrical layer do not pass through the WXC part.

An OXC with colorless, directionless, and contentionless (C/D/C) capability is the key to creating flexible optical networks [11, 12]. These capabilities are of critical importance in configuring optical paths to respond to continually changing network situations quickly and economically without manual operations. A transponder is colorless if it can connect any wavelength channel to any fiber port, which can be done with a tunable transponder. Directionless operation enables each transponder to access any input/output fiber. The contentionless functionality allows multiple transponders to access different fibers simultaneously with the same wavelength. Usually the switch scale necessary for implementing the C/D/C function is very large and costly. For example, to handle 8 optical fibers, each carrying 96 wavelength channels, the OXC needs a huge 768 x 768 switch just for C/D/C operation, which is obviously impractical. It is therefore natural to limit the maximum number of wavelength paths originating or terminating at the OXC.

In this paper, we propose novel matrix-switch-based hierarchical optical node architectures for the purpose of reducing C/D/C switch scale. By applying a dedicated add/drop interface, the proposed node architecture not only decreases the scale of WXC part but also controls the originating/terminating ratio independently, which can minimize C/D/C switch scale. The configuration of the C/D/C switch itself is not discussed herein. Several technologies for creating the C/D/C switch are known, for example optical or electrical space switches or ODU cross-connects if sub-λ granularity is necessary. Starting from our previous work [10], which introduced a node architecture with dedicated add/drop functionality, this paper offers a strategy to reduce C/D/C switch scale. First, we summarize the conventional switch architectures and present the main concept of the proposed switch architecture. Three HOXC architectures are then proposed considering different originating/terminating restrictions. A quantitative analysis shows that the proposed node architecture can substantially reduce total switch scale.

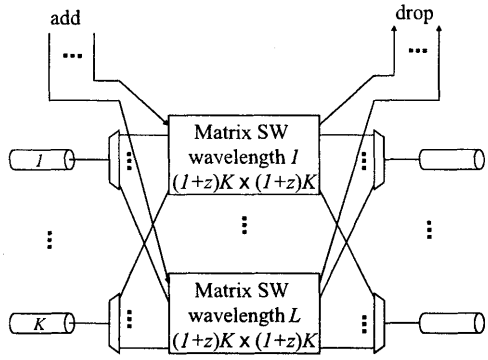

Fig. 1 Conventional single-layer OXC.

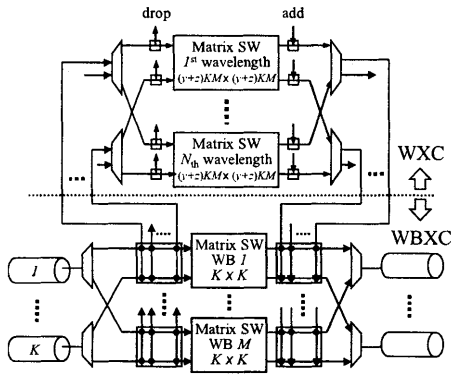

Fig. 2 Conventional HOXC architecture.

2. Preliminaries

2.1. Conventional switch architectures for single-layer OXC and HOXC

Figs. 1 and 2 depict conventional switch (SW) architectures for single-layer OXC and HOXC, respectively. Let K be the number of input/output fibers and L the number of wavelength paths per fiber. The originating/terminating ratio, the ratio of the number of optical paths for termination or origination to that of all incoming/outgoing optical paths, is denoted as z. The conventional single-layer OXC has L $(1+z)K$ x $(1+z)K$ matrix SWs for each group of optical paths with the same wavelength, see Fig. 1 [6]. This architecture imposes a limit on the number of added/dropped wavelength paths within each wavelength index group. For the HOXC, let M be the number of waveband paths per fiber, N the number of wavelength paths per waveband, and y the grooming ratio; the ratio of the number of waveband paths that can be reconfigured at the WXC part to that of all incoming/outgoing waveband paths. The conventional HOXC has M K x K matrix SWs for each waveband index group, and N $(y+z)KM$ x $(y+z)KM$ matrix SWs for each i-th wavelength index in incoming wavebands. In addition, this HOXC uses $2K$ matrix SWs specially designed for waveband add/drop operations and colorless multi/demultiplexers (MUXs/DEMUXs) that can be commonly used by any waveband indices to achieve colorless waveband add/drop operation. For more details of this configuration, refer to [7]. In the node architecture proposed in this paper, we assume the HOXC architecture shown in Fig. 2, except for add/drop functions from/to the electrical layer, since it is one of the most advanced matrix-switch based architectures in hierarchical cross-connect nodes [7].

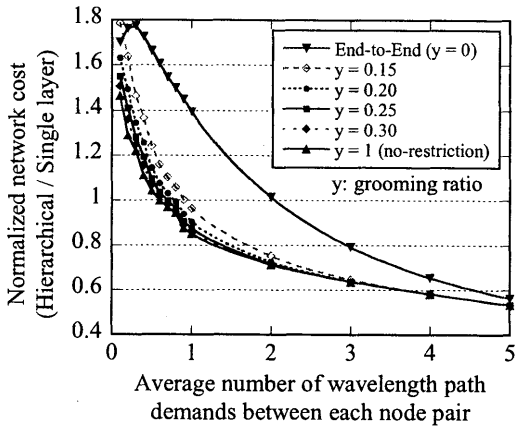

Fig. 3 Normalized network cost for 9x9 regular mesh network.

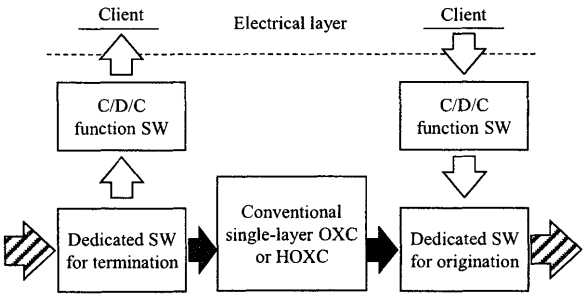

Fig. 4 Overall structure of proposed node architecture.

2.2. Basic concept of node architecture with dedicated add/drop switch for termination

The basic concept of the proposed HOXC architecture is splitting add/drop functions into those for originating/terminating waveband paths and those for grooming waveband paths. Their ratios are called originating/terminating ratio and grooming ratio, respectively [9]. This concept can be straightforwardly applied to conventional single-layer OXCs (replace HOXC with single-layer OXC in Fig. 4), however, we focus here on the HOXC. The important point is to allocate small SWs dedicated to specific functions. It is noted that we can control only the grooming ratio because the originating/terminating ratio (or number of paths) is determined by demands from the upper layer. We have proposed a network design algorithm with grooming ratio restriction that is applicable to our proposed HOXC architecture [9]. As shown in Fig. 3, our proposed HOXC architecture and design algorithm can achieve significant reductions in switch scale and hence network cost, compared to the single layer optical path network; $M = 8$, $N = 12$ and 9x9 regular mesh network was used. Even when the grooming ratio is restricted to 0.2, the proposed algorithm provides almost the same network costs as that with no restriction for all traffic demand areas. This means that the HOXC offers about 50% switch scale reduction in the cross-connect part [6, 8]. Please note that carriers do not need to know the optimal value of the grooming ratio. What carriers should do is to declare the amount of originating or terminating traffic at nodes and node degree. With the values, the network design algorithm automatically determines necessary switch hardware scale to accommodate the demands with consideration of the grooming ratio restriction.

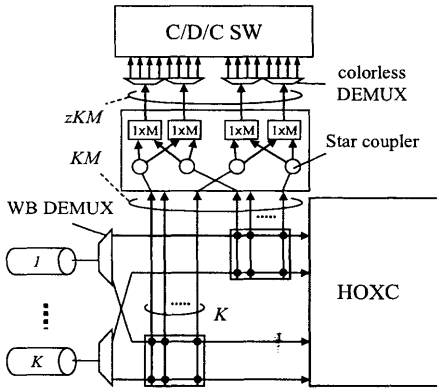

Fig. 5 Proposed TR-HOXC architecture with restriction on originating/terminating waveband paths (only drop part is illustrated).

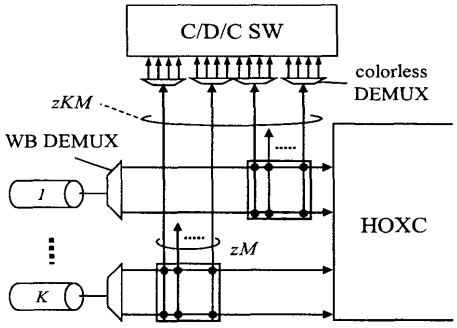

Fig. 6 Proposed EFR-HOXC architecture (only drop part).

3. Proposed HOXC architectures considering three kinds of originating/terminating ratios

Fig. 4 depicts the functional diagram of proposed HOXC architecture. At the first stage, a dedicated SW for termination, incoming waveband paths are separated into those terminated at the node and those forwarded to other nodes. The second stage provides the cross-connect function with the conventional HOXC. The dedicated SW for origination traffic at the third stage transmits the waveband paths to adjacent nodes by merging optical paths from the cross-connect part and waveband paths originated at the node. Discussion in this paper is focused on just the drop side of the node, that is, the drop side SW for termination. The same SW architecture can be applied to the add side SW for origination paths by reversing the optical signal direction.

We propose three HOXC architectures that impose different drop restrictions. Separation of drop SW part can be realized by matrix SWs that have through ports, as are used in conventional HOXC nodes [7]. In the proposed HOXC architectures, switching operation of the dedicated SW is carried out at the waveband path granularity level. In the front of the C/D/C SW, these architectures need DEMUXs that have capability of colorless operation, that is, demultiplexing any of the waveband paths regardless of the waveband index. For example, a cyclic arrayed waveguide grating (AWG) or the specially designed AWG for colorless operation can be applied to these DEMUXs. Please see [7] for the details of this topic.

Fig. 5 shows a TR-HOXC that restricts the waveband terminating ratio, the number of drop waveband paths to total incoming waveband paths, (this ratio is unrelated to fiber or

Table 1. Comparison of proposed HOXC architectures

Kinds of restriction	Figure	SW element	# of SC	# of cross-points
Total – TR	Fig. 4-(a)	$K \times K$	KM	$2K^2M+2zKM(M-1)+2yK^2M^2+K^2M+(yKM)^2N$
Each fiber – EFR	Fig. 4-(b)	$M \times zM$	-	$2zKM^2+2yK^2M^2+K^2M+(yKM)^2N$
Each waveband - EBR	Fig. 4-(c)	$K \times zK$	-	$2zK^2M+2yK^2M^2+K^2M+(yKM)^2N$

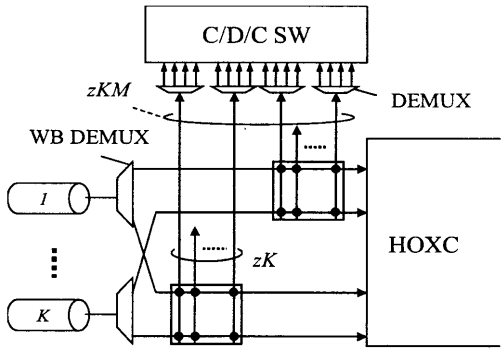

Fig. 7 Proposed EBR-HOXC architecture (only drop part).

waveband index). We call this total restriction. Fig. 6 displays an EFR-HOXC that limits the ratio of terminating waveband paths in terms of each fiber (called each fiber restriction). Fig. 7 shows an EBR-HOXC that restricts the number of terminating waveband paths by each waveband index (called each waveband restriction). Table 1 summarizes required SW elements, the number of star couplers, and number of switch cross-points.

4. Switch scale evaluations and comparison of HOXC vs. single-layer OXC

The SW scale is evaluated by counting the number of cross-points including the drop side SW for termination as well as the add side SW for origination and the cross-connect part represented as HOXC. This evaluation contains all the SWs except for C/D/C SWs because the required scale of C/D/C SW is the same in both the single-layer OXC and the HOXC, if the originating/terminating ratio is the same. For comparison, we consider two single-layer OXCs. One is that shown in Fig. 1, and the other is a single-layer OXC, called the advanced single-layer OXC, that adopts separate add/drop SWs for origination and termination. The advanced single-layer OXC employs matrix switches with through ports as in the proposed HOXC, but they operate at wavelength path granularity. These single-layer OXCs offer each wavelength restriction as regards originating/terminating wavelength paths. In this evaluation, the following parameters are used, M=8, N=12, thus L=96, y=0.25. As mentioned before, the reason for choosing grooming ratio y=0.25 is that the efficient algorithm [9] yields almost the same performance as when no grooming restriction is imposed.

Fig. 8 demonstrates the evaluated SW scales with regard to switch degree K, where z is set at 0.375. The proposed HOXC architectures greatly reduce SW size regardless of restriction type, compared to conventional and advanced single-layer OXCs. The proposed TR-HOXC achieves over 37% SW scaled reduction for all switch degrees. The proposed EFR-HOXC and EBR-HOXC can offer the smallest level of switch scales at almost the same size; they attain over 45% SW scale reduction. Fig. 9 demonstrates the SW scale variation in terms of z when K=8. It is clarified that the proposed HOXC architectures substantially reduce SW size

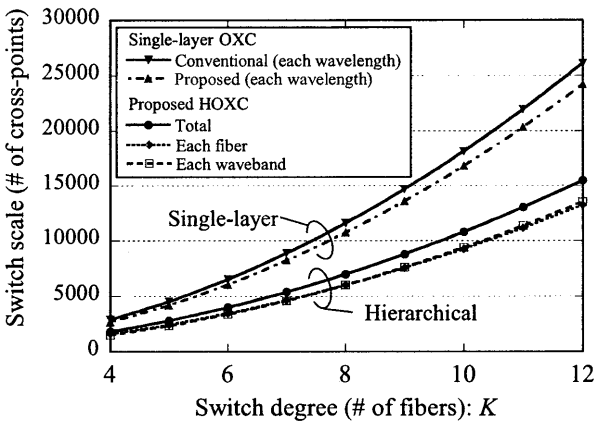

Fig. 8 Switch scale evaluation for switch degree, K.

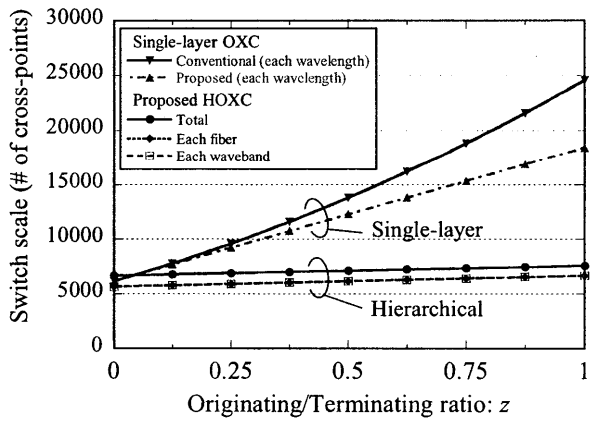

Fig. 9 Switch scale evaluation for originating/terminating ratio, z.

compared to the single-layer OXCs regardless of restriction type. The result also shows that the proposed HOXC variants have almost constant size as the originating/terminating ratio z increases. It should be noted that the SW scale evaluations in this paper do not include the C/D/C SW part (common to all switches). The scale of C/D/C SW increases in proportion to the square of the originating/terminating ratio.

5. Conclusion

This paper proposed novel optical node architectures that can control the number of added/dropped optical signals. The proposed architecture separately implements, at WBXC, the add/drop functions for originating/terminating operations and those for grooming operations. Numerical evaluations revealed that the proposed HOXC architecture can significantly reduce total switch scale. Moreover, thanks to the dedicated implementation of each add/drop function, colorless, directionless and contentionelss capabilities can be realized efficiently. The substantial degree of switch scale reduction available with novel HOXC architectures

presented here will extend technology choices; reliable PLC technology, for example, can be applied to create flexible OXC nodes with colorless/directionless/contentionless capability.

Acknowledgement

This work was partly supported by NICT (λ-reach) and JSPS KAKENHI (226957)

References

[1] K. Sato, "Recent developments in and challenges of photonic networking technologies," *IEICE Trans. Commun.*, vol. E90-B, no. 3, pp. 454-467, Mar. 2007.

[2] ITU-R Recommendation, BT.1769, "Parameter values for an expanded hierarchy of LSDI image formats for production and international program exchange," Jan. 2006.

[3] K. Sato, and H. Hasegawa, "Optical networking technologies that will create future bandwidth abundant networks," *J. Opt. Commun. Netw.*, vol. 1, no. 2, pp. A81-A93, Jul. 2009.

[4] X. Cao, V. Anand, and C. Qiao, "Framework for waveband switching in multigranular optical networks: part I – multigranular cross-connect architectures," *OSA J. Opt. Netw.*, vol. 5, no. 12, pp. 1043-1055, Dec. 2006.

[5] L. Noirie, C. Blaizot, and E. Dotaro, "Multi-granularity optical cross-connect," in *Proc. ECOC*, pp. 269-270, Oct. 2000.

[6] S. Kakehashi, H. Hasegawa, and K. Sato, "Optical cross-connect switch architectures for hierarchical optical path networks," *IEICE Trans. Commun.*, vol. E91-B, no. 10, pp. 3174-3184, Oct. 2008.

[7] R. Hirako, K. Ishii, H. Hasegawa, and K. Sato, "Compact matrix-switch-based hierarchical optical path cross-connect with colorless waveband add/drop ratio restriction," *IEICE Trans. Commun.*, vol. E94-B, no. 4, pp. 918–927, Apr. 2011.

[8] S. Mitsui, H. Hasegawa, and K. Sato, "Hierarchical optical path cross-connect node architecture using WSS/WBSS," in *Proc. Photonics in Switching*, paper S-04-1, Aug. 2008.

[9] R. Hirako, K. Ishii, H. Hasegawa, K. Sato, H. Takahashi, and M. Okuno, "Flexible and Compact Hierarchical Optical Cross-Connect Node with Waveband Add/Drop Restriction," in *Proc. OFC/NFOEC*, paper OTuE5, Mar. 2011.

[10] Y. Yamada, H. Hasegawa, and K. Sato, "Coarse granular routing in optical networks and impact of supplemental intermediate grooming," in *Proc. ECOC*, paper Th.10.F.1, Sep. 2010.

[11] S. Woodward, M. Feuer, P. Palacharla, X. Wang, I. Kim, and D. Bihon, "Intra-node contention in a dynamic, colorless, non-directional ROADM," in *Proc. OFC/NFOEC*, paper PDPC8, Mar. 2010.

[12] R. Jensen, A. Lord, and N. Parsons, "Colourless, directionless, contentionless ROADM architecture using low-loss optical matrix switches," in *Proc. ECOC*, paper Mo.2.D.2, Sep. 2010.