CHAPTER 1

INTRODUCTION

In this chapter, introductory remarks are made before getting into the description of the detail of the research. Introductory remarks are consists of five parts (1.1 Background: explaining motivations of the research and the relation between realizing Eco-system and this study; 1.2 Proposed Methodologies: explaining the methodologies I proposed to reduce the impact of global warming and ozone depletion of *legacy* air-conditioning systems; 1.3 Refrigerant and Lubricant Oil: explaining fluid dynamic behavior of the lubricant oil inevitable for normal operation of air-conditioning systems; 1.4 Scope of the Methodologies: Application to Thermal Recycling: explaining the scope of the methodologies by exemplifying an application to thermal recycling of wasted heat rejected from air-conditioning systems; 1.5 Organization of the Thesis: explaining the structural framework of the thesis).

1.1 Background

It seems that issues on global warming are getting more serious day by day. In order to recover and preserve the environment for our descendants, we have to take action right now.

According to Nishizawa & Ueno (2005), environmental issues have been induced by trilemma complicated by economical development, environmental impact, and shortage of natural resources, energy, and foods. In order to save the earth from global warming issues, we have to relax the trilemma structure. Untying complicated trilemma structure requires materializing Eco-system by integrating three knowledge areas (philosophy: to create sound global environment; science: to create an economy system in accordance with Eco-system; and technology: to create engineering methodologies in accordance with Eco-system). Based on their theory, I have been working on realizing Eco-system. However in this study, I started to pursue the knowledge on technology which is directly applicable to our daily life as a means to protect the environment of the earth. Generalization of technological knowledge to science and further sublimation to philosophy would require me more enthusiastic efforts. Those are remained to be done in the future although the goal would be distant.

In this study, I focus on the impact on the environment induced by air-conditioning systems since they are energy consuming devices indispensable for human life especially in humid areas, like Asia Monsoon area. In addition, the number of air-conditioning systems are always increasing as the life in developing countries economically improves. Therefore large amount of energy would be increasingly consumed by air-conditioning systems world-wide. Although many attempts have been performed to improve the efficiencies of air-conditioning systems, I consider “retrofit” methodologies for *legacy* systems which uses HCFC refrigerant. “Retrofit”

means the way to keep using the system as it is by replacing or installing only parts of the system instead of replacing a whole system so that the product life of the system is extended and thus the impact on the environment should be reduced.

HCFC refrigerant has the impact on global warming in addition to ozone depletion. According to the Montreal Protocol, the quantity of HCFC refrigerant, including HCFC22, must be reduced to 35% or less by 2010 to protect the ozone layer, and to be abolished by 2020. Irrespective of these, many *legacy* air-conditioning systems are still in use world-wide. Thus I decided to study retrofit methodologies to reduce the impact on global warming and ozone depletion induced by *legacy* air-conditioning systems.

1.2 Proposed Methodologies

I propose two retrofit methodologies to reduce the impact on global warming and ozone depletion of *legacy* air-conditioning systems:

(1) installing the special equipment, the additional condenser

(2) refrigerant replacement from HCFC22 to HFC134a

In order to confirm the first methodology, I tested *legacy* air-conditioning systems installed external additional condensers based on Ohguri (1999). As the operational efficiency was improved by installing an additional condenser onto the existing air-conditioning system, the energy consumption of the system was decreased and thus the quantity of carbon dioxide generated during operation was able to be reduced (Goto *et al.*,2005, Goto *et al.*,2006a).

Regarding the second methodology, we have to think about refrigerant used in air-conditioning systems. Japanese Ministry of Environment (2003) warned that the quantity of HCFC refrigerant including HCFC22, generally used in *legacy* air-conditioning systems, must be

reduced to 35% or less by 2010 to protect the ozone layer, and to be abolished by 2020, according to the Montreal Protocol. Therefore I intended to replace the refrigerant of *legacy* air-conditioning systems to the alternative one.

The properties of typical refrigerant are listed in Table 1. According to The Heat Pump and Thermal Technology Center of Japan (2004), HFC refrigerants and natural refrigerants, such as hydrocarbon and ammonia, are known as alternative refrigerants. However, natural refrigerants have problems of safety, *i.e.*, inflammability and toxicity. In addition, mixed HFC refrigerant, a kind of HFC refrigerant consisting of several refrigerants with different boiling points, also have a problem in handling, *i.e.*, the component ratio varies due to leakage during operation and replenishment.

Contrary to these, HFC134a is a single (non-mixed) HFC refrigerant and has relatively small GWP (Global Warming Potential). Thus it could make the impact on global warming to a minimum. Although the GWP of HFC134a is said to be 1300 times larger than that of carbon dioxide, it becomes less when atmospheric longevity is taken into consideration. Furthermore, according to McMullan (2002) and Sekiya (2002), it becomes less than that of natural refrigerants including carbon dioxide, when we evaluate TEWI (Total Equivalent Warming Impact) that considers even an indirect effect. Therefore, if HFC134a could be used in the air-conditioning systems with high efficiency, it could contribute to improving the ozone layer and global warming in addition to solving above-mentioned problems of natural refrigerants and mixed refrigerants. This contribution of HFC134a would be enhanced by legally forcing to switch from HCFC to HFC refrigerant and collect HCFC refrigerant upon exchanging refrigerant and stopping usage of *legacy* air-conditioning systems.

In order to confirm the second methodology, I would study refrigerant replacement from HCFC22 to HFC134a inside of *legacy* air-conditioning systems. Proposed methodologies are validated in chapter 2.

Table 1 Properties of typical refrigerant

Mark Chemical formula		R22 $CHClF_2$	R134a CH_2FCF_3	R407C *3	R410A *4	R744 CO_2	R717 NH_3	R290 C_3H_8
		Single	Single	Azeotrope	Azeotrope	Single	Single	Single
Molar weight		86.48	102.031			44	17.03	44.06
Boiling point [^oC]		-40.8	-26.18			-33.3	-33.3	-42.3
Fusing point [^oC]		-160	-101			-78.5	-77.7	-189.9
Critical temperature [^oC]		96	101.15			31	133	94.9
Critical pressure [MPa]		4.98	4.06			7.33	11.27	46.51
Latent heat of evaporation [kJ/kg]		205.3	42.54			65.2	350.9	
Thermal conductivity [W/m・K](10^{-2})		9.93	8.15			10.5	53.9	
Ratio to R22	Capacity / swept vol	100	62	98	95	153	115	83
	Cycle COP	100	99	140	89	27	105	97
Flammability		None	None	None	None	None	Low	High
Toxicity		Low	Low	Low	Low	Low	High	Low
Life in atmosphere [Year]		11.9	13.8	15.6	17	120	<<1	<10
ODP*1		0.055	0	0	0	0	0	0
GWP*2		1700	1300	1500	1700	1	0	3

*1:ODP(Ozone Depleting Potential)
*2:GWP(Global Warming Potential)
*3:R407C(R134a(52wt%)+R125(25wt%)+R32(23wt%))
*4:R410A(R125(50wt%)+R32(50wt%))

Note: The values in the Table are based on Ishiwatari (2001), Japanese Center for Promotion of Refrigerant Collection (2002), Ohsumi (1999), and Kataoka (2002)

1.3 Refrigerant and Lubricant Oil

In order to understand the system from the engineering view of point, I have also to answer the question whether mineral oil circulate in an air-conditioning system for HCFC22 by simply replacing HCFC22 with HFC134a if HFC134a would be used in an air-conditioning system.

Lubricant oil in the compressor should be inevitably exhaled because of its structural mechanism. If exhaling of the lubricant oil would be continued without returning, the quantity of the oil would be decreased in the compressor. Due to this, the lubricating performance would be deteriorated and the compressor would lead to burn during operation. Moreover, if the lubricant oil would be stocked in the tubing, it would cause decrease of the diameter of the tube and prevent refrigerant from circulating throughout the system and thus might lead to the decrease of the performance of the heat exchanger. In order to avoid these problems, lubricant oil which is compatible to refrigerant is used to keep oil circulate throughout the system and its quantity inside the compressor constant. However, it is known that mineral lubricant oil miscible in HCFC22 is immiscible in HCFC134a. Therefore, the combination of HFC134a and mineral oil have not been in practice since compatibility is not good for air-conditioning systems.

Regarding the study on the behavior of mixing flow between refrigerant and incompatible mineral oil, although a lot of research in the static condition (see for example, Fukuta *et al.*, 1997, Kato, 1985, and Noguchi & Enjo, 1985) has been done so far, few research on the flow in the capillary tube (Fukuta, 2003) or the measurement of the oil retention (Cremaschi *et al*., 2005) in the dynamic conditions have been done. It should be possible to retrofit *legacy* air-conditioning systems designed for HCFC22 with HFC134a which is not compatible to mineral oil if lubricant oil could circulate throughout the tubing of the system without causing any problems (Goto *et al.*,2006b, Goto *et al.*,2007a). Since incompatibility between refrigerant and lubricant oil is also

an important issue for natural refrigerants, including carbon dioxide, quite a few related studies are emerging recently (Ohsumi, 1999, kataoka, 2002, and Dang *et al*., 2006). I would study this issue in chapter 3.

1.4 Scope of the Methodologies : Application to Thermal Recycling

As stated in 1.1, our ultimate goal is to realize Eco-system by integrating three knowledge areas: philosophy, science and technology. The first step to do so should be generalization of proposed methodologies by extending the applicable scope.

The impact on global warming by energy consumption of air-conditioning systems is so large that various research and development projects are performed aiming at high efficiency and energy saving of air-conditioning systems. Irrespective of these efforts, it is usual that the heat rejected form air-conditioning systems is merely discharged in the atmosphere and never recovered. As a result, this is not only a waste of energy but also a causes of a “heat island phenomenon” in the central area of big cities where buildings are overcrowded. The heat island phenomenon is a phenomenon that makes the temperature of the atomosphere several dgrees higher than that of surrounding suburbs, where the temperature distribution is isolated like an island (Mikami, 2004). Once the heat island phenomenon occurs, in addition that energy consumption of air-conditioning systems increases, ambient temperature does not fall even at night when air-conditioning systems stop to work and thus we would be forced to live unpleasant life.

In this research, I studied a desuperheater as a variation of the additional condenser to exemplify extending the scope of the proposed methodologies. A desuperheater is a heat exchanger that collects heat rejected from air-conditioning systems during condensation of

refrigerant and makes water hot. It is usually set separately at the former steps of the condenser with the separate cooling water system. Due to this, the water flow rate of a desuperheater can be independently adjusted from that of the condenser so that high temperature water can be supplied. A desuperheater was retrofited on the air-conditioning system to supply hot water by regenerating heat rejected from air-conditioning systems instead of being discharged in the atmosphere, and performance of supplying hot water was evaluated.

Major contribution on research and development of a desuperheater was achieved mainly in the house equipment field. There exist some research papers on desuperheaters (see for example, Lee & Jones 1996a and Lee & Jones 1996b). However, regarding refrigerant, HCFC22 was only applied to all research projects.

HFC134a is more appropriate to apply for high temperature water heaters because it has lower pressure characteristics in higher temperature region. Therefore in chapter 4, I evaluated the effect of the quantity of charged refrigerant on performance of the system and performance change (energy efficiency of heat exchange due to air-conditioning, COP, and overall energy efficiency due to both supplying hot water and air-conditioning) induced by installing a desuperheater onto *legacy* air-conditioning systems with adopting HFC134a as refrigerant and applying an water-cooled additional condenser as a desuperheater based on the patent of The Institute for Eco & Economy System, Inc. (2004) (Goto *et al.*,2007b, Goto *et al.*,2008).

1.5 Organization of the Thesis

In this study, I propose, validate, and apply retrofit methodologies to reduce the impact of global warming and ozone depletion of *legacy* air-conditioning systems. The structure of the thesis is as follows:

In Chapter 2, I would validate proposed methodologies: energy saving of *legacy* air-conditioning systems using the additional condenser and operation of *legacy* air-conditioning systems by replacing refrigerant from HCFC22 to HFC134a.

In Chapter 3, I study the flow behavior of mineral lubricant oil with HFC134a. Beginning with the static evaluation of the compatibility between mineral lubricant oil and refrigerant, I visualize the circulation behavior of refrigerant and lubricant oil in an actual tubing of the air-conditioning system. Moreover, the existence of lubricant oil in refrigerant is confirmed by extracting the working fluid from the tubing of the air-conditioning system under operation.

In Chapter 4, I test the desuperheater as a variation of the additional condenser to exemplify the scope of the proposed methodologies.

In chapter 5, I close the study with concluding remarks.

Finally the objectives of this study are summarized as follows:

(1) Improving energy efficiency of *legacy* air-conditioning systems by retrofitting the additional condenser.

(2) Replacing refrigerant from HCFC22 to HFC134a in *legacy* air-conditioning systems to realize environmentally conscious ones that does not cause ozone depletion.

(3) Confirming the circulation of mineral lubricant oil in *legacy* air-conditioning systems with HFC134a.

(4) Realizing a hot-water supply system using wasted heat from the air-conditioning systems by retrofitting the additional condenser applied as desuperheater on to a *legacy* air-conditioning system and replacing refrigerant from HCFC22 to HFC134a.

CHAPTER 2

OPERATION OF AIR-CONDITIONING SYSTEMS BY PROPOSED METHODOLOGIES

In this chapter, I would validate the proposed methodologies. I first confirm the effect on the performance induced by the additional condenser retrofit on to the *legacy* air-conditioning system, followed by assessing the effect of refrigerant replacement from HCFC 22 to HFC 134a with and without an additional condenser.

2.1 Experimental Setup

The air-conditioning system made by Mitsubishi Heavy Industry (Specifications: Refrigerant: HCFC22; Compressor power output: 2.5 kW; Cooling output: 11.6 kW; Heating output: 12.7 kW) was used as a main experimental device. The major dimensions of the outdoor unit (FDC100H7) are: fin pitch: 1.8 mm (slit fin); heat transfer tube: inner diameter 7.94 mm × thickness 0.3 mm (bear tube), 2 arrays - 48 stages, frontal width: 832.4 mm, frontal area: 1.014 m^2, array pitch: 19.04 mm. Regarding the indoor unit (FDT100H7): fin pitch: 1.8 mm (rover fin); heat transfer tube; inner diameter 9.52 mm × thickness 0.305 mm (channel tube), 2 arrays - 20 stages, frontal width; 786 mm, frontal area: 0.4 m^2; array pitch; 19.04 mm. Regarding the capillary tube for heating: inner diameter: 1.5 mm; outer diameter: 3.2 mm; length: 400 mm. Regarding the capillary tube for cooling: inner diameter: 1.2 mm; outer diameter: 2.5 mm; length: about 300 mm.

The performance of the system was measured by retrofitting the external additional condenser on the outdoor unit of this air-conditioning system. Figure 1 shows the setup configuration of the additional condenser retrofit on the outdoor unit of the *legacy* air-conditioning system. Figure 2 shows the configuration of the experimental apparatus. Figure 3 shows the circuit charts with the additional condensers for (a) cooling operation and (b) heating operation. In order to function as a condenser for both operations, the additional condenser is installed between the condenser and the evaporator. The additional condenser is mounted on the upper suction side of the condenser of the outdoor unit so that air comes first into the additional condenser and condenser next. The additional condenser augments the heat exchange at the outdoor unit for cooling operation. For heating operation, the additional condenser could increase the inlet air

temperature of the evaporator at the outdoor unit. In this system, refrigerant flown out from the compressor flows into the condenser, the additional condenser, and the evaporator in order. The ball valves were installed between the outdoor unit and the additional condenser for switching the system with/without the additional condenser.

Figure 4 shows the details of the additional condenser made of Aluminum, which has a similar structure to that of a condenser of automobile air-conditioning systems. This type of condensers is selected because it is available with low-cost and the cost is the most important factor to proliferate the proposed methodologies. The flat tube is divided into four small channels so that heat could be exchanged efficiently. The heat exchange capacity of the additional condenser is 5.8 kW which is a half of the existing condenser. HCFC22 and HFC134a were used as refrigerants. Mineral oil for HCFC22 (Barrel Freeze 32s) was used as lubricating oil for both refrigerants. Based on the catalogue of the manufacturer (Matsumura Oil Co., Ltd.), the typical physical properties of Barrel Freeze 32s are as follows: density (g/cm^3): 0.886 @ 15 ^oC; dynamic viscosity (mm^2/s): 360 @ 0 ^oC, 32.0 @ 40 ^oC, 4.87 @ 100 ^oC.

The data are measured as follows: The outdoor unit and the indoor unit are set up separately in each laboratory room where the wall, the ceiling, and the floor are insulated. The temperature of refrigerant is measured by 11 T-type thermocouples at the compressor, the condenser, the additional condenser, the capillary tube, and the evaporator. The temperature of air is measured by 45 T-type thermocouples and a dry and wet thermometer in each suction opening and the supply opening of the condenser, the additional condenser, and evaporator. The pressure of refrigerant was measured by the pressure gauge at the outlet of the compressor, the condenser, the additional condenser and the evaporator.

The test was done for both cooling and heating operation. For additional heat loading, the indoor unit of the extra air-conditioner was installed in the outdoor unit side of the laboratory room and the out door unit of the extra one was installed in the indoor unit side. The extra air-conditioner was in cooling operation for the cooling test and in heating operation for the heating test. The temperature of refrigerant and air, the pressure of refrigerant, and the current value and the integral of the electric power of the compressor were measured and COP was calculated. The test conditions are listed in Table 2.

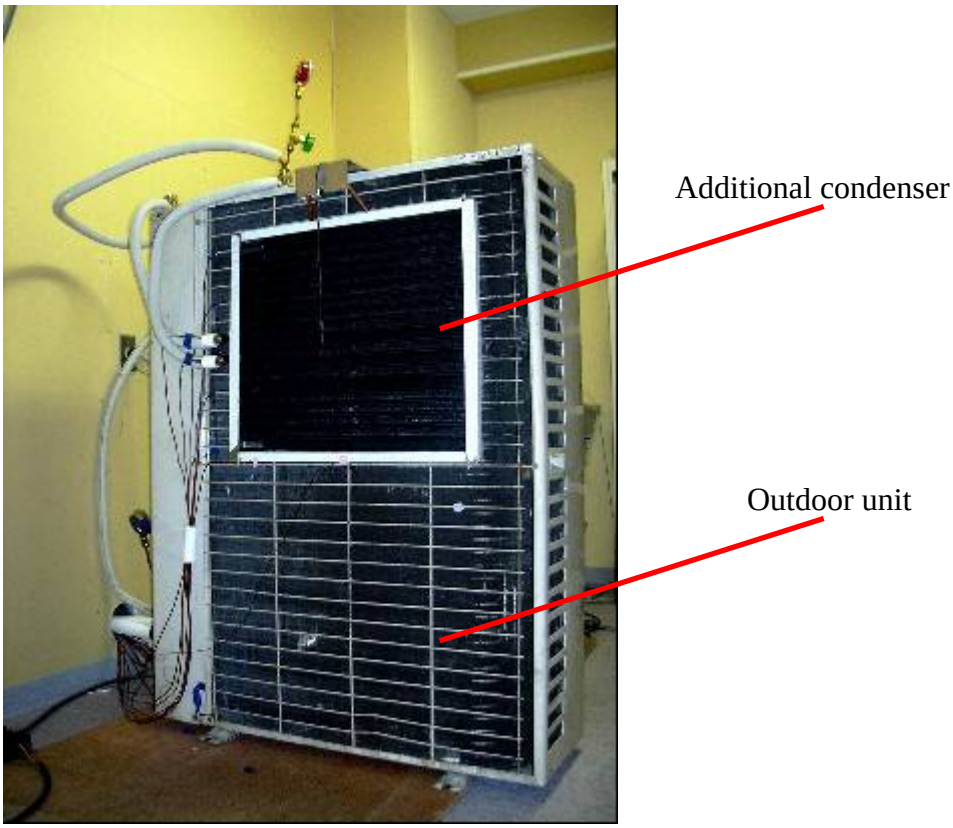

Figure 1 Setup configuration of the additional condenser on the outdoor unit

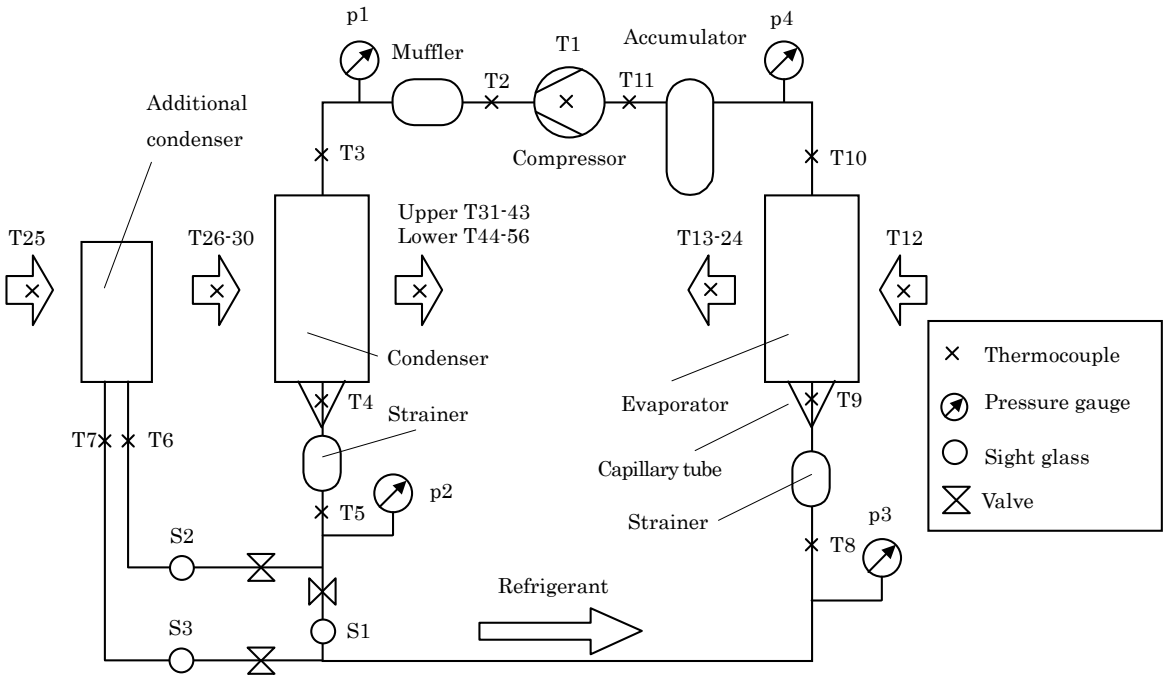

Figure 2 Configuration of experimental apparatus

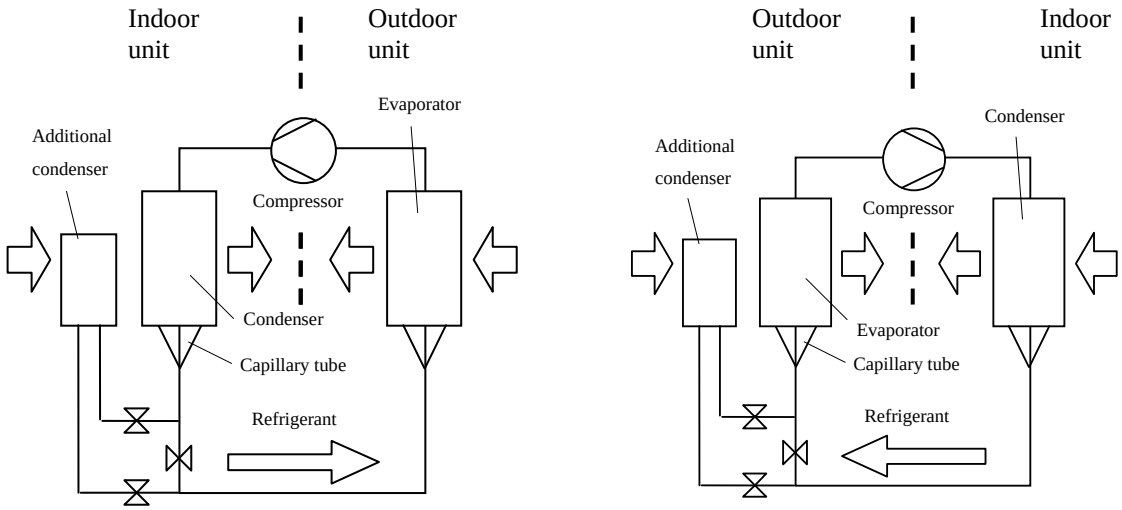

(a) Cooling operation **(b) Heating operation**

Figure 3 Circuit chart of the system realization test with an additional condenser

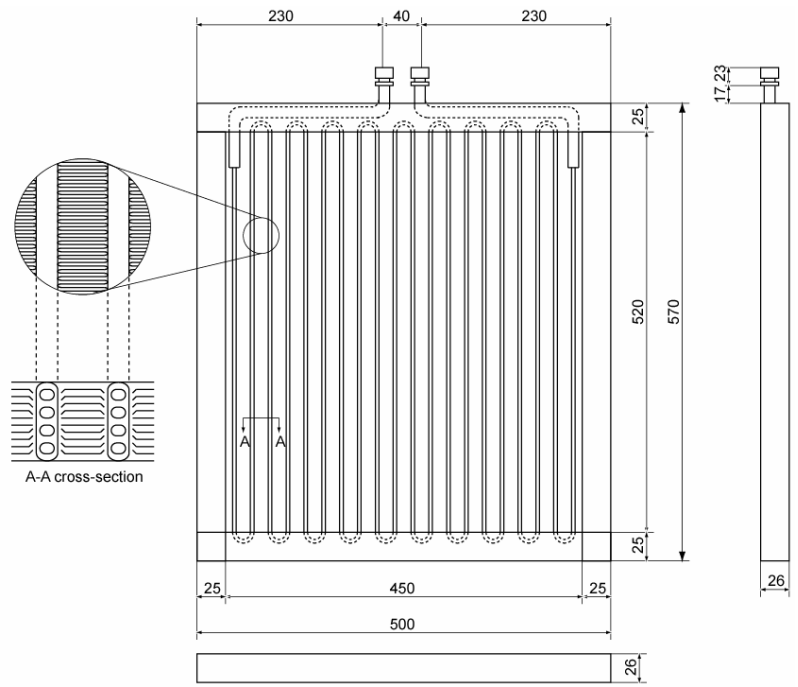

Figure 4 Schematic diagram of the additional condenser

Table 2 Experimental conditions

Refrigerant	Oil	Additional condenser	Operation mode
HCFC22	Mineral oil	None	Cooling
		Installing	Cooling
HFC134a	Mineral oil	None	Cooling
		Installing	Cooling
		Installing	Heating

2.2 Results and Discussion

2.2.1 Cooling Operation with HCFC22

I am discussing on the cooling operation results using HCFC22 with and without the additional condenser. HCFC22 was charged by 3.48 kg so that COP of air-conditioning machine was optimized. In this case, complete condensation of refrigerant was observed at the exit of the condenser when operated without the additional condenser. Same amount of refrigerant was charged when operated with the additional condenser so that COP of air-conditioning machine was not optimized. This is because I need to get the sole effect of retrofitting the additional condenser by eliminating the effect of the change of the refrigerant charge. In general, the amount of refrigerant would need to be increased in order to optimize COP when the additional condenser was retrofit since the capacity of the condenser was increased.

Figure 5 shows that the temperatures change of refrigerant and the cooling air at the condenser or the additional condenser. Figure 5(a) is the case without the additional condenser and (b) and (c) are the case with the additional condenser. The outlet air temperature of the additional condenser equals to the inlet air temperature of the upper inlet air temperature of the condenser. Since heat was exchanged at both the additional condenser and the condenser, the temperature decrease was observed by 2.4 ^{o}C at 30 minutes from the start of the test as shown in Figure 5(c). We can see that the additional condenser works normally. At this moment, refrigerant is sub-cooled condition with 43.1 ^{o}C of the temperature and 2.15 MPa of the pressure of refrigerant. Throughout the test period, sub-cooled condition of refrigerant was also observed through the sight glass at the exit of the additional condenser.

Figure 6 shows that the temperatures change of refrigerant and air at the evaporator. Figure 6(a) is the case without the additional condenser and (b) is the case with the additional condenser.

As shown in Figure 6(a) and (b), the temperature decrease of air through the evaporator at 30 minutes from the start of the test was 23.4 ^{o}C in the case without the additional condenser and 24.3 ^{o}C in the case with the additional condenser. The differences in temperature decrease are due to the effect of the additional condenser. We can see that the evaporator works normally. As can be seen in Figure 6(b), at the initial period of the measurement, the temperature of outlet air is lower than that of refrigerant. It is thought that the anomaly in temperature profile is induced by the local measurement of non-uniform air flow. In the case without the additional condenser, the air-conditioning system stops to work because of the high pressure cut at 50 ^{o}C of air at the inlet of the condenser and at 2.75 MPa of the pressure after compression. In the case with the additional condenser, the air-conditioning system stops to work when air at the inlet of the condenser reaches 51 ^{o}C because of the high temperature cut after compression.

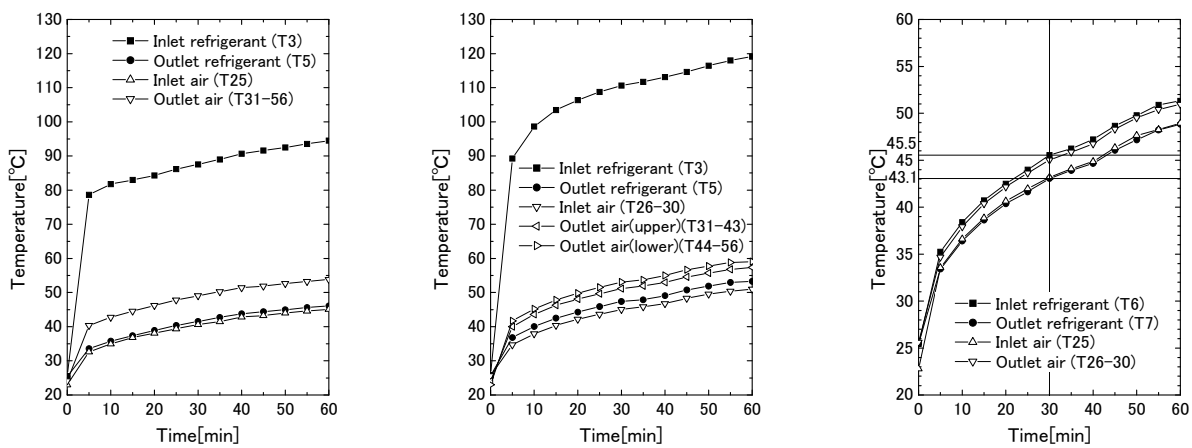

(a) At condenser without additional condenser **(b) At condenser with additional condenser** **(c) At additional condenser**

Figure 5 Temperature change of air and refrigerant at condenser (HCFC22)

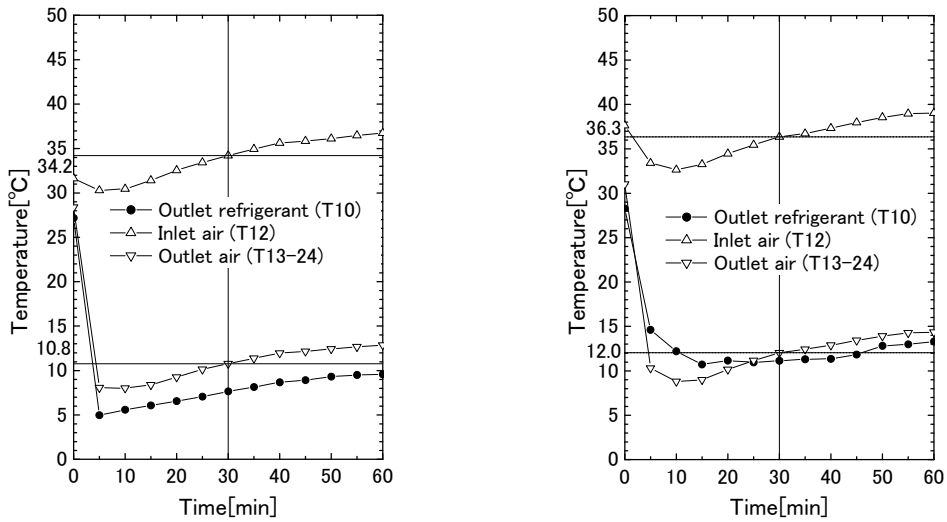

(a) Without additional condenser **(b) With additional condenser**

Figure 6 Temperature change of air and refrigerant at evaporator (HCFC22)

2.2.2 Cooling Operation with HCFC134a

Next, I tested air-conditioning system for cooling operation by replacing HCFC22 with 3.5 kg of HFC134a; however the lubricant oil of the compressor was not replaced. Prior to the test, I confirmed the COP of the system was optimized by the same amount of HFC134a as the case with HCFC22 in 2.2.1. The test results are as follows:

Figure 7 shows the temperature change of air and refrigerant at the condenser and the additional condenser. Since the heat is exchanged at both the additional condenser and the condenser, the temperature decrease of refrigerant was observed by 41.8 ^{o}C through the condenser and 1.4 ^{o}C through the additional condenser at 120 minutes from the start of the test as shown by the bold line scales in Figure 7(a) and (b). Refrigerant was sub-cooled condition with 41.3 ^{o}C of the temperature and 1.45 MPa of the pressure of refrigerant at 60 minutes from the start of the test and with 47.0 ^{o}C and 1.67 MPa of refrigerant at 120 minutes. Throughout the test period, sub-cooled condition of refrigerant was also observed through the sight glass at the exit of the additional condenser.

As stated in 2.2.1, the system stops when the inlet air temperature of the condenser reaches beyond 50 ^{o}C in the case of HCFC22 due to over high pressure or temperature. However, the system keeps working normally even if the inlet air temperature of the condenser reaches beyond 50 ^{o}C in the case of HFC134a.

Figure 8 shows the temperature change of air and refrigerant at the evaporator. The temperature differences are 20.2 ^{o}C as shown by the bold line scales. Thus it can be seen that the evaporator works normally.

Because of the characteristics of HFC134a, the pressure of refrigerant and the current are much lower throughout the test period than those values in the case of HCFC22.

Based on the above results, I confirm that the *legacy* system for HCFC22 works normally even by replacing refrigerant to HFC134a.

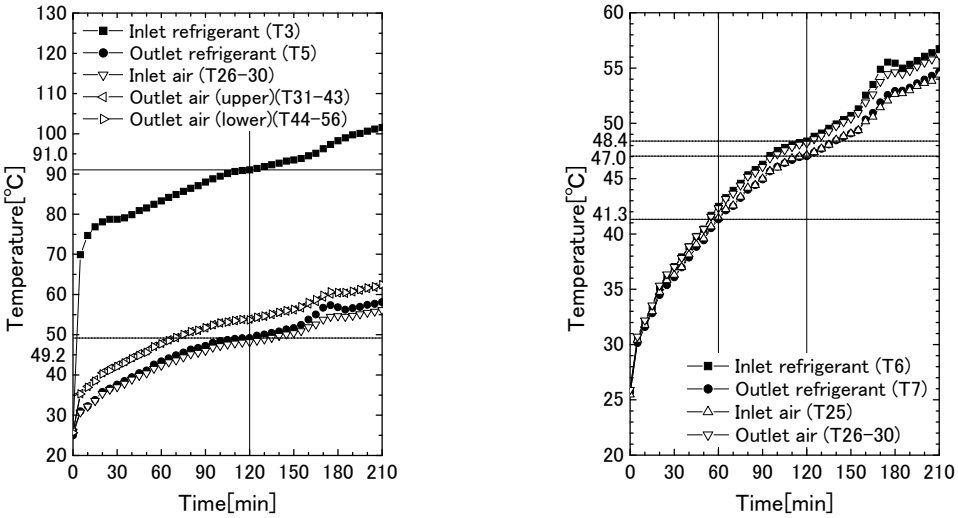

(a) Condenser **(b) Additional condenser**

Figure 7 Temperature changes of air and refrigerant at condenser and additional condenser (HFC134a)

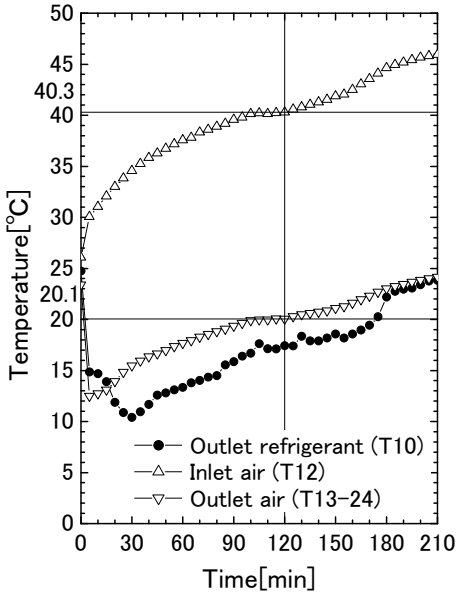

Figure 8 Temperature changes of air and refrigerant at evaporator (HFC134a)

2.2.3 Operation in Steady State Environment

In 2.2.1 and 2.2.2, qualitative comparison of COP is difficult since the room temperature always increases during the test because of the experimental set up conditions. In order to realize the steady condition of the ambient temperature, the experiments were done by using another system setting the outdoor unit literally outdoors. In this case, the outdoor temperature was almost constant although the environmental condition was still different from JIS specifications *i.e.*, the indoor temperature (dry/wet) 27 ^{o}C/19 ^{o}C, the outdoor temperature 35 ^{o}C.

Air-conditioning system used was made by Mitsubishi Heavy Industry, however; specifications are little larger than in unsteady experiments in 2.2.1 and 2.2.2 (Refrigerant: HCFC22; Compressor power output: 2.75 kW; Cooling output: 14.0 kW; Heating output: 16.0 kW). The additional condenser (5.8 kW) is mounted on the lower suction side of the condenser of the outdoor unit. The quantity of refrigerant was kept 3.48 kg as specified for HCFC22 by the manufacturer for all cases *i.e.*, it was not always optimized for each case.

Table 3 shows experimental conditions, indoor air temperature, outdoor air temperature, temperature and pressure of refrigerant in the compressor, and temperature of refrigerant at the exit of the condenser (or additional condenser). AC indicates the additional condenser. Data in case 1 and 2 are those in the test in different days. Based on Table 3, I confirm that the *legacy* system for HCFC22 works normally even by replacing refrigerant to HFC134a on this experimental conditions.

Table 3 Performance of air-conditioning system with different refrigerant and with/without additional condenser (AC)

Case (Date)	Condition	Indoor unit				Outdoor unit	Compressor				Outlet of condenser	Relative consumed electric power	Relative heat exchange at evaporator	Relative COP
		Air temperature					Refrigerant pressure		Refrigerant temperature		Refrigerant temperature			
		Inlet		Outlet		Inlet								
		[°C]		[°C]		[°C]	[MPa]		[°C]		[°C]			
		Dry	Wet	Dry	Wet		Inlet	Outlet	Inlet	Outlet				
Case 1 (June 21, 2005)	HCFC22	24.9	20.4	8.2	7.8	29.4	0.449	1.10	5.2	73.7	23.9	1.00	1.00	1.00*
	HCFC22+AC	25.1	20.7	8.0	7.6	29.6	0.443	1.40	4.8	75.6	22.9	1.00	1.03	1.03
	HFC134a	25.0	21.0	12.5	12.3	27.4	0.299	0.72	7.3	50.0	24.7	0.70	0.74	1.05
	HFC134a+AC	24.6	20.6	11.9	11.6	27.0	0.284	0.83	5.4	52.4	22.3	0.69	0.77	1.13
Case 2 (September 15, 2005)	HCFC22	27.3	19.6	7.6	7.3	29.9	0.439	1.08	8.9	64.6	24.8	1.00	1.00	1.00
	HCFC22+AC	26.6	19.5	7.0	6.8	28.2	0.433	1.37	8.6	66.5	22.3	1.00	1.03	1.03
	HFC134a	27.1	20.4	12.1	11.9	29.9	0.296	0.74	10.6	44.4	26.2	0.69	0.76	1.10
	HFC134a+AC	27.0	20.1	11.3	11.0	30.3	0.284	0.89	9.9	49.0	25.0	0.67	0.81	1.21

* Absolute value of COP = 2.08 (This value contains measurement errors); the referenced catalogue value of COP = 5.09

2.2.4 Coefficient of Performance (COP)

A heat exchange at the indoor unit (q) is described as follows:

$$q = \rho Q \Delta h \tag{1}$$

where ρ is the density of air, Q the flow rate of air, and Δh the enthalpy difference of air between the suction and the blow out sides. Now COP is defined as follows:

$$\mathrm{COP} = q/W \tag{2}$$

where W is the electric power consumption.

Here note that obtaining accurate flow distribution by measuring air velocities at a couple of points in flow field is so difficult that error in obtained flow rate data should be large. Thus in order to cancel an inaccuracy of the flow rate in heat exchange term, we introduced relative COP defined as the ratio of the COP to the reference COP, which is obtained in the test without an additional condenser using HCFC22 refrigerant:

$$\text{Relative COP} = \text{COP}/(\text{COP without an additional condenser using HCFC22}). \tag{3}$$

The right three columns of the Table 3 show the relative COP for HCFC22 and HFC134a with/without an additional condenser as well as relative consumed electric power and relative heat exchange at the evaporator. The relative COPs in each condition are also compared in Figure 9.

The relative COP indicates that installation of the additional condenser increases COP by about 3 % for HCFC22 and by about 10 % for HFC134a. This is due to the sub-cooling condition induced by the additional condenser. In addition, COP is higher for operation with HFC134a even though the heat exchange at the evaporator (or at the indoor unit) is lower than the case with HCFC22. This is because the decrease of the consumption of electric power exceeds that of the heat exchange at the evaporator. HFC134a generally has lower pressure than HCFC22 at the compressor as shown in Table 1, which results in the lower consumption of the electric power. Thus, I conclude that an excellent performance can be realized when HFC134a is used and an additional condenser adds more excellence on performance.

We can understand above discussion based on Mollier diagrams. The diagrams for HCFC22 and HFC134a are plotted in Figure 10(a), (b) for Case 2 in Table 3. The thin solid line represents the cycle without the additional condenser (AC) and the thick solid line the cycle with the additional condenser. These diagrams show the effects of the additional condenser as follows:

(1) An additional condenser makes refrigerants more sub-cooled for both HCFC22 and HFC134a.

(2) Although an additional condenser makes the pressure of the compressed refrigerant higher, no change is induced for the work done by the compressor and thus for COP.

(3) Since an additional condenser makes the pressure of refrigerant lower before evaporation for HFC134a, less electric power is consumed at the compressor.

(4) Regarding super heating, no difference was observed for both HCFC22 and HFC134a.

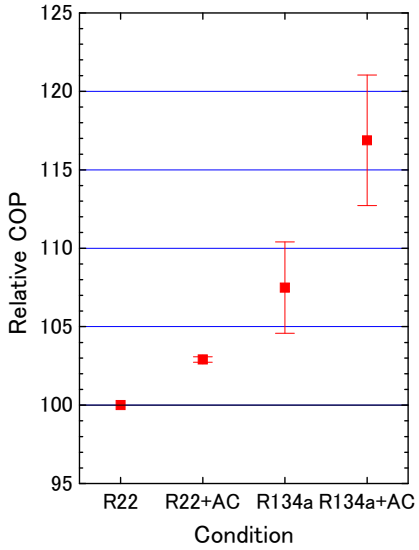

Figure 9 Comparison of COPs

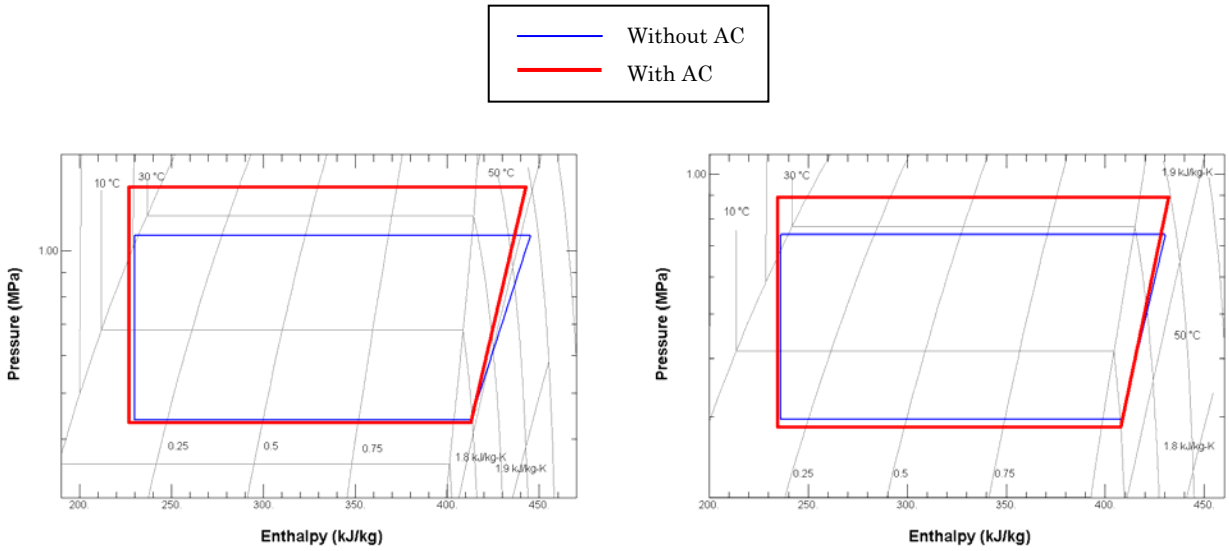

(a) HCFC22 **(b) HFC134a**

Figure 10 Mollier diagram of the performance test (Case 2)

2.2.5 Heating Operation with HFC134a

Installation of an additional condenser is equivalent to enlarging capacity of a condenser. Enlarged condenser working efficiently for cooling operation would not work well as enlarged evaporator for heating operation when a condenser and an evaporator are switched due to the mode change. However, no problem occurs even in heating operation because an additional condenser always works as a condenser in our setup. If a heat exchange area of an indoor unit was enlarged in heating operation, the temperature of blow out air would be decreased. However, an area of an indoor unit does not change in our setup and thus the temperature of blow out air is not decreased. Note that we cannot expect indoor heat release from an additional condenser nor COP improvement in heating operation since it always works as an outdoor unit.

Figure 11 and Figure 12 show the temperature change of an inlet and an outlet air at an indoor unit and at an additional condenser (a part of an outdoor unit) respectively. The temperature increase was observed by 20.8 ^{o}C through an indoor unit at 60 minutes from the start of the test as shown by the bold line scales in Figure 11. Thus I confirmed that the system worked normally as a heater even if an additional condenser was installed. The temperature increase was observed by 4.4 ^{o}C through an additional condenser at 60 minutes from the start of the test as shown by the bold line scales in Figure 12. Although it might indicate the effect of frost prevention in low temperature area, tests based on JIS specification remained to be done for accurate assessment.

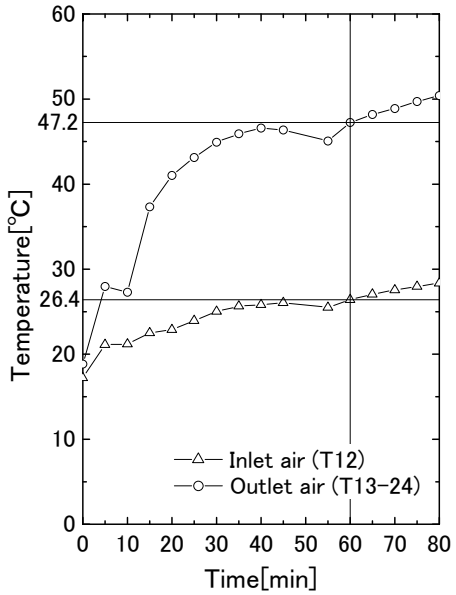

Figure 11 Temperature difference of inlet and outlet air at indoor unit

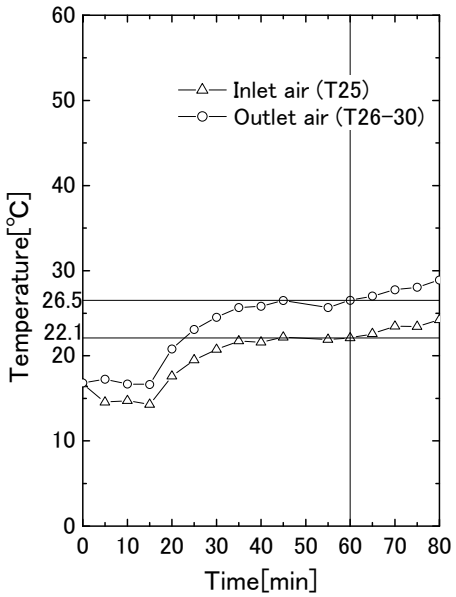

Figure 12 Increase of air temperature by passing through additional condenser

2.3 Long Term Operation

Since all operational data were obtained from short time tests in our laboratory, long-term reliability when HCFC22 refrigerant was replaced with HFC134a in an air-conditioning system was not verified. For this purpose, we collected data of systems in operation replacing refrigerant from HCFC22 to HFC134a in addition to installing an additional condenser onto the existing air-conditioning system (see Table 4 for operational periods). Since there are cases running longer than three years, I conclude that it is possible to operate *legacy* air-conditioning systems for HCFC22 in long periods by replacing refrigerant from HCFC22 to HFC134a

Table 4 Data of long-term operations using HFC134a instead of HCFC22

Place	Installation	Operation period[a]
A company	February 4, 2002	3 years and 9 months
B company	February 23, 2002	3 years and 9months
C factory	July 27, 2002	3 years and 4 months
D factory	December 27, 2003	1 years and 11 months

[a]data at November 2005

2.4 Concluding Remarks

In this chapter, I examined the performance of air-conditioning systems retrofit an additional condenser to improve efficiencies of *legacy* air-conditioning systems. Further I examined the performance of *legacy* air-conditioning systems replaced HCFC22 refrigerant to HFC134a to confirm the effect of refrigerant replacement. Obtained results are as follows:

(1) Retrofitting an additional condenser on to *legacy* air-conditioning systems makes COP improved and consumed energy saved.

(2) Replacing refrigerant from HCFC22 to HFC134a causes no problems to *legacy* air-conditioning systems retrofit additional condensers even if mineral lubricant oil was used as it is. The system works normally even with higher COP and does not stop even when the outside temperature goes beyond 50 ℃.

Thus I conclude that proposed methodologies are validated.

CHAPTER 3

CIRCULATION OF IMMISCBLE MINERAL LUBRICANT OIL IN AN AIR-CONDITIONING SYSTEM

In order to understand the system from the engineering view of point, I have also to answer the question whether mineral oil circulate in *legacy* air-conditioning system for HCFC22 when simply replacing HCFC22 by HFC134a. Therefore in this chapter, I would study the mechanism of the circulation of refrigerant and mineral lubricant oil under operation.

Firstly, I test compatibility of refrigerant and mineral lubricant oil. Next, I visualize the circulation behavior of refrigerant and mineral lubricant oil under actual operation. Moreover, the existence of mineral lubricant oil in refrigerant is confirmed by extracting the working fluid from the piping of the air-conditioning system under operation.

3.1 Compatibility Test

I confirm the compatibility of HCFC22 and HFC134a with mineral oil in the pre-operation condition before observing it in the dynamic operational condition.

3.1.1 Experimental Setup

Figure 13 shows the circuit chart of the compatibility experiment. The equipment consists of a glass tube covered with an explosion-proof tube made of acrylic resin, an incubator, a compressor and a vacuum pump. The resisting pressure of the glass tube is 5.0 MPa.

The glass tube in which refrigerant and mineral lubricant oil is enclosed is soaked in the incubator, and the whole system is set up statically so that there is no disorder of the liquid. When refrigerant is enclosed, the pressure is adjusted by the compression equipment. The temperature and pressure are measured by thermocouples inserted in the glass tube and the pressure gauge set up in the inlet zone of the glass tube respectively. The experimental conditions are almost reproduced corresponding to the state at the compressor inlet, the compressor outlet, the condenser outlet, and the additional condenser outlet. Table 5 shows the pressure and the temperature conditions of HCFC22 and HFC134a in the compatibility experiment. Four conditions are determined based on the experiment in Chapter 2. However, the pressure at the compressor outlet, the condenser outlet, and the additional condenser outlet cannot be precisely adjusted since the pressure is adjusted by a simple compression equipment made from a mechanical piston. The values are thought to be “similar” to the real conditions.

Mineral oil (Barrel Freeze 32s; see 2.1 for physical properties) is used as lubricant oil.

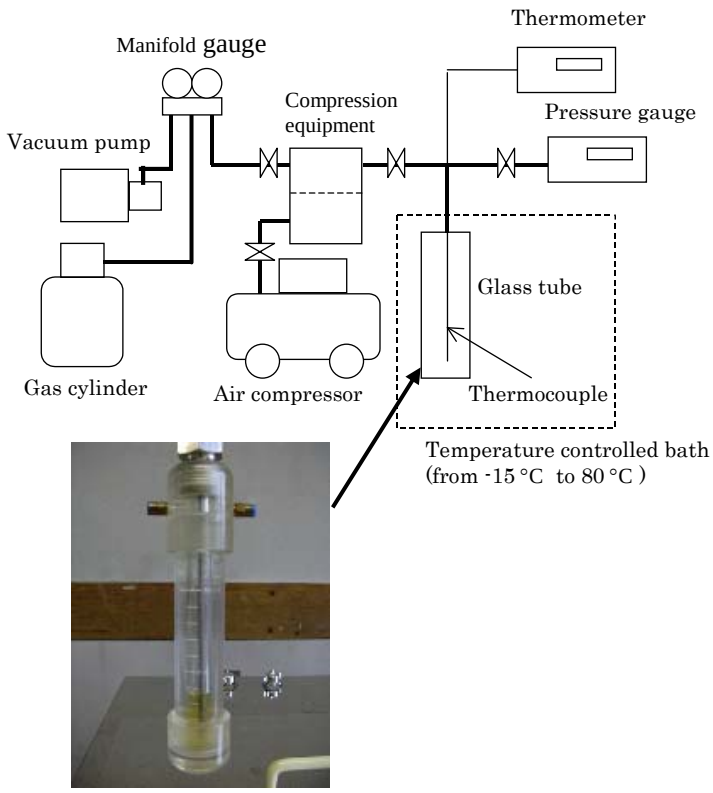

Figure 13 Circuit chart of compatibility test equipment

Table 5 Experimental conditions for compatibility test

	HCFC22		HFC134a	
	Temperature [°C]	Pressure [MPa]	Temperature [°C]	Pressure [MPa]
Inlet of compressor	21.7	0.40	20.0	0.30
Outlet of compressor	72.3	1.77	72.7	1.30
Outlet of condenser	40.8	1.30	39.9	0.90
Outlet of additional condenser	37.8	1.25	36.5	0.79

3.1.2 Results and Discussion

Firstly, I describe the result of the compressor inlet condition. Figure 14(a) shows sole mineral oil in the vacuum condition and Figure 14(b), (c) show the mixture of mineral oil and refrigerant in the compressor inlet condition. The oil level before enclosing refrigerant is the same position of the vacuum condition. Refrigerant is in the complete gas phase condition. Although there is no enormous discrepancy of the liquid level position of mineral oil among in the vacuum condition, when HCFC22 or HFC134a is enclosed, vague shadows are observed for both cases because the fluctuation of refractive index might be caused as a result of dissolving of refrigerant to mineral oil. However, the region of HFC134a where the fluctuation in refractive index occurred is smaller than that of HCFC22, thus it is thought that the amount of the dissolved HFC134a to mineral oil is less than that of HCFC22. This is also confirmed by Figure 15 showing the change of the pressure of refrigerant confined in the test equipment. The pressure of HCFC22 is decaying, however, that of HFC134a is almost constant.

Next, I describe the result of the compressor outlet condition. Figure 16(a) shows the sole mineral oil in the vacuum condition and Figure 16(b), (c) show the mixture of mineral oil and refrigerant in the compressor outlet condition. The voids seen in the figure are adhered outside of the glass tube. The oil level before enclosing refrigerant is the same position of the vacuum condition. Refrigerant is complete gas phase condition. As seen in the figure, the liquid level of mineral oil is pointed at 3.3 ml in the vacuum. When HCFC22 is enclosed, the liquid level changes to 4.2 ml. When HFC134a is enclosed, the liquid level again changes to 3.8 ml. Moreover, bubbles are generated from the inside of mineral oil for both HCFC22 and HFC134a cases while decompressing after the experiment. Thus it is thought that at the compressor outlet condition, more quantity of HCFC22 and HFC134a dissolved to mineral oil than at the

compressor inlet condition. Furthermore, fewer quantity of HFC134a is thought to be dissolved than that of HCFC22.

Finally, I describe the result of conditions at the condenser outlet and the additional condenser outlet. Since no distinct difference is observed between both conditions, the result of condition at the additional condenser is only shown in Figure 17. When refrigerant is enclosed in addition to mineral oil, two phase condition, the gas and liquid, is observed. In the case of HCFC22, we observe only refrigerant in the gas phase and the mixture of refrigerant and mineral oil in the liquid phase. However, in the case of HFC134a, we observe in the tube the gas phase refrigerant, mineral oil, and liquid phase refrigerant, separately from the top. Thus I conclude that at the conditions of the condenser outlet and the additional condenser outlet, mineral oil is miscible to liquid phase HCFC22 and immiscible to the liquid phase HFC134a. The values listed in Table 5 corresponds to super heated conditions so that those cannot be gas-liquid two phase conditions. However, we observed two phase conditions because there might be measurement errors due to non-uniformities of temperature and deviations of saturated vapor pressure of refrigerant due to mixing with mineral oil.

Based on the above-mentioned results, I think that at the conditions of the compressor inlet and outlet there is no distinct difference in terms of the circulation between the cases of HCFC22 and HFC134a since mineral oil is miscible to both refrigerants although the miscible quantity are different. However, I think that at the conditions of the outlets of the condenser and the additional condenser, there should be distinct difference between both cases since mineral oil is miscible to HCFC22 whereas immiscible to HFC134a.

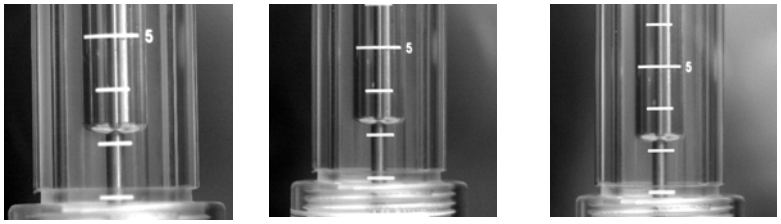

(a) Vacuum/Mineral oil (b) HCFC22/Mineral oil (c) HFC134a/Mineral oil

Figure 14 Solubility between refrigerant and mineral oil at the condition corresponding to the inlet of the compressor

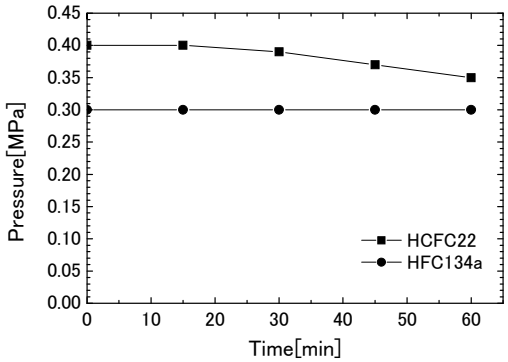

Figure 15 Pressure change of refrigerant due to miscibility at the condition corresponding to the inlet of compressor

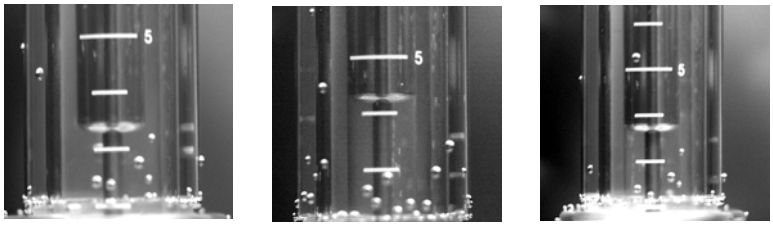

(a) Vacuum/Mineral oil (b) HCFC22/Mineral oil (c) HFC134a/Mineral oil

Figure 16 Solubility between refrigerant and mineral oil at the condition corresponding to the outlet of the compressor

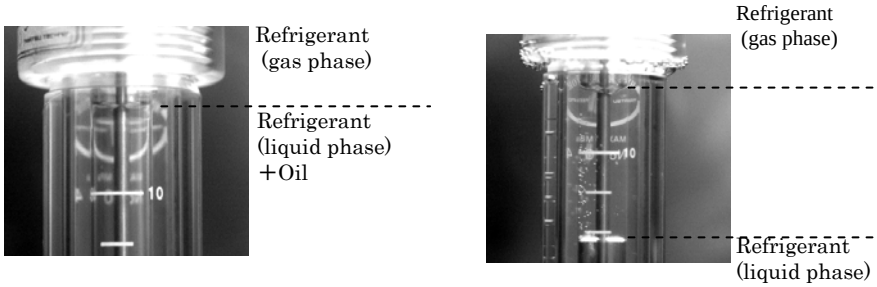

(a) HCFC22/Mineral oil (b) HFC134a/Mineral oil

Figure 17 Solubility between refrigerant and mineral oil at the condition corresponding to the outlet of the additional condenser

3.2 Flow Visualization in the Circuit

It is known that mineral lubricant oil is miscible in HCFC22, but immiscible in HCFC134a. However, it has been made clear that the air-conditioning machine works well with HFC134a and mineral lubricant oil as described in the chapter 2. In this section, in order to verify the circulation of lubricant oil, flows of refrigerant and lubricant oil at the outlet of additional condenser and the inlet of compressor were visualized by installing rectangular tubes with two flat glass windows.

3.2.1 Experimental Method

Figure 18 shows the circuit chart for the flow visualization experiment. The configuration of the circuit is almost same as that used in the chapter 2. An air-conditioning machine (Mitsubishi Heavy Industries; compressor power 2.5kW, designed cooling output 11.6 kW, heating output 12.7 kW) with capillary tubes is used for the experiment (see chapter 2 for detail). The external additional condenser (5.8 kW) is installed on the outdoor unit. HCFC22 and HFC134a are used as refrigerants. Mineral oil for HCFC22 (Barrel Freeze 32s; see 2.1 for physical properties) is used as lubricating oil for both refrigerants. The flow visualization equipments are installed at the outlet of the condenser and the additional condenser, and the inlet of the compressor.

Figure 19 shows the rectangular tube for the flow visualization made of the stainless steel with two flat PIREX glass windows, a cross section of 15 mm height $\times$ 23 mm depth and 100 mm long for the inlet of compressor (6/8 inch), whereas a cross section of 7 mm height $\times$ 15 mm depth and 100 mm long for the outlet of the condenser and the additional condenser (3/8 inch).

A digital camera (Nikon D1) with a short focus lens (Micro NIKKOR, f = 55 mm) is used to take photographs of flows in rectangular tubes at an exposure time of 1/10,000 sec, with a back light of a 500 W daylight lamp. Experimental conditions for visualization, *i.e.* temperatures and

pressures of refrigerants at the outlet of condenser, the outlet of additional condenser and at the inlet of compressor, are listed in Table 6. Note that temperature of refrigerant at the inlet of the compressor is different from that in the compatibility test because HFC134a is more super heated due to less quantity.

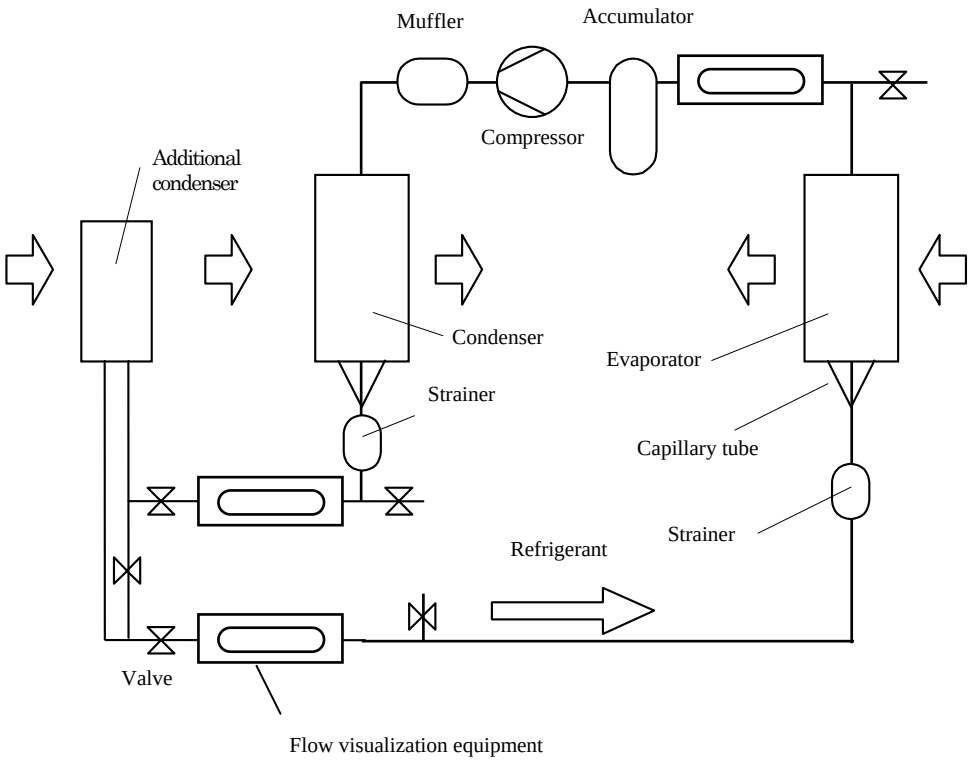

Figure 18 Circuit chart of flow visualization experiment with an additional condenser

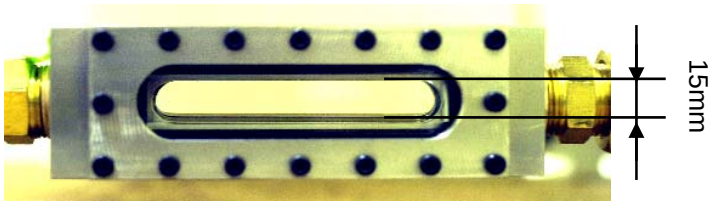

Figure 19 Flow visualization equipment for outlet of additional condenser

Table 6 Experimental conditions for flow visualization

	HCFC22		HFC134a	
	Temperature [℃]	Pressure [MPa]	Temperature [℃]	Pressure [MPa]
Outlet of condenser	35	1.40	35	0.83
Outlet of additional condenser	34	1.35	29	0.79
Inlet of compressor	13	0.219	22	0.107

3.2.2 Results and Discussion

3.2.2.1 Experiment Using HCFC22

In the pre-operation condition, HCFC22 is completely gas phase at the outlet of the condenser and any mineral oil is not observed. When the air-conditioning system starts, the liquid refrigerant comes into the tube with gas bubbles. As the operation goes on, the flow becomes stable, however, keeps being gas-liquid two phase condition and never condensed completely. It is thought based on the observations in Chapter 2 that this condition is induced by installation of the additional condenser. There we observed that the condition at the outlet of the condenser is almost condensed in the case without an additional condenser. However, it is gas-liquid two phase condition in the case with an additional condenser because installation of an additional condenser makes the temperature of the inlet of the condenser higher.

The steady state condition is defined as the one where the temperature fluctuation is within 1 ^{o}C in 1 minute. Figure 20(a) shows the steady state flow of HCFC22 and mineral oil at the outlet of the condenser. It is thought that mineral oil is completely miscible to the liquid HCFC22 judging from the result of the compatibility test described in 3.1. When the air-conditioning system stops, the flow is becoming slow and the phase of HCFC22 changes from the liquid phase to complete gas phase.

In the pre-operation condition, HCFC22 enters the gas phase completely at the outlet of the additional condenser and no mineral oil was observed. When the air-conditioning system starts, liquid refrigerant comes into the tube with gas bubbles. As the operation goes on, the flow became stable and changed to complete condensed phase. The quality should be zero judging from the temperature and pressure at this moment. Figure 20(b) shows the flow of HCFC22 and mineral oil at the outlet of the additional condenser. Mineral oil is miscible in liquid phase

HCFC22 and a homogeneous flow is observed at the outlet of the additional condenser. When the air-conditioning system stops, the flow is becoming transiently gas-liquid two phase again, and finally the gas phase only. Therefore it is thought that HCFC22 is completely condensed although mineral oil miscible to liquid HCHC22 is not observed.

In the pre-operation condition, HCFC22 is gas liquid equilibrium condition at the inlet of the compressor since the compressor is located lower position of the system. When the air-conditioning system starts, the liquid refrigerant is flown out and the flow has entered the gas phase only. Then we observe a little liquid on the bottom of the flow visualization equipment. As the flow becomes stable, the liquid is separated from refrigerant and flows along the walls. I think that the liquid is mineral oil containing a little gas phase of HCFC22 judging from the result of the compatibility test described in 3.1. Figure 20(c) shows the flow of HCFC22 and mineral oil at the inlet of the compressor. We observe mineral oil is stacked at the stagnating region near the inlet of the flow visualization equipment. Thus it is thought that mineral oil is stacked in other stagnating region in the system. When the air-conditioning system stops, I observe the mixture of the liquid HCFC22 and mineral oil. The liquid HCFC22 and mineral oil are transiently seen to be separated and finally becoming homogeneous as in the pre-operation condition.

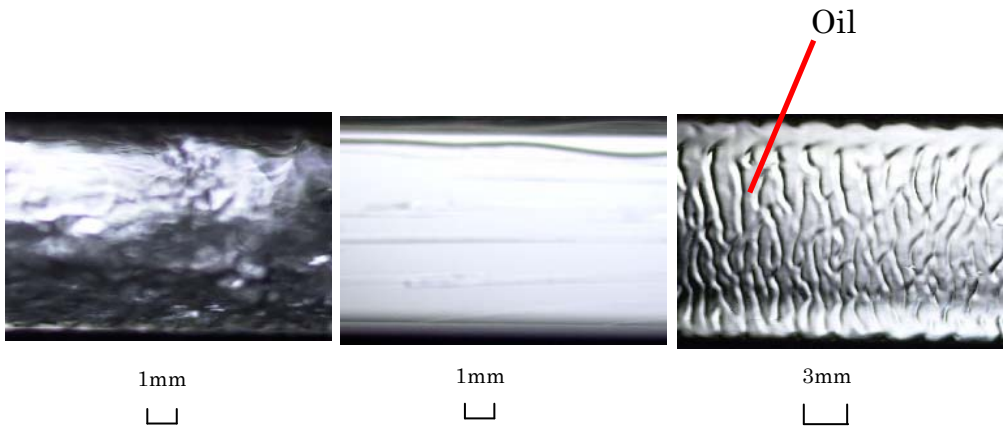

(a) Outlet of condenser (b) Outlet of additional condenser (c) Inlet of compressor

Figure 20 Flow visualization results of HCFC22 and mineral oil

3.2.2.2 Experiment Using HFC134a

In the pre-operation condition, HCFC134a is mostly gas phase at the outlet of the condenser and any mineral oil is not observed. When the air-conditioning system starts, the liquid refrigerant comes into the tube with gas bubbles. As the operation goes on, the flow becomes stable, however, keep being gas-liquid two phase condition. Figure 21(a) shows flows of HFC134a and mineral oil at the outlet of the condenser. When the air-conditioning system stops, the flow is becoming slow and the liquid phase turns into the gas phase only. Although bubbles prevent us from seeing mineral oil during the operation, as the flow goes stable, a little liquid which seems to be mineral oil is observed on the bottom of the flow visualization equipment.

In the pre-operation condition, HCFC134a is completely gas phase at the outlet of the additional condenser and we observe droplets of mineral oil are adhered on the walls of the equipment. When the air-conditioning system starts, the liquid refrigerant comes into the tube with gas bubbles. Then we observe droplets of mineral oil in the liquid HFC134a. As the operation goes on, the flow becomes stable and completely condensed to be liquid phase only. The flow is sub-cooled condition judging from measured temperature and pressure. Figure 21(b) shows the steady state flow of HFC134a and droplets of mineral oil at the outlet of the additional condenser. Mineral oil is immiscible in liquid phase HFC134a and a flow of oil droplets in liquid phase HFC134a is observed at the outlet of the additional condenser. The mass ratio of mineral oil is about 0.1 wt% calculated from the volume of the droplets in the figure. When the air-conditioning system stops, the flow is becoming transiently gas-liquid two phase again, and finally the gas phase only. Then we observe droplets of mineral oil are adhered on the walls of the equipment.

In the pre-operation condition, droplets of mineral oil are floating on the liquid phase HCFC134a at the inlet of the compressor. When the air-conditioning system starts, the liquid refrigerant is flown out and becomes the gas phase only. As the flow becomes stable, the liquid is separated from refrigerant and flows along the walls. Figure 21(c) shows the steady state flow at the inlet of the compressor. I think that the liquid should be mineral oil contained a little gas HCFC134a judging from the result of the compatibility test described in 3.1. This is similar to the case of HCFC22. When the air-conditioning system stops, mineral oil adhered on the walls comes down to the bottom of the equipment and the liquid phase HFC134a is coming in. Then we observe droplets of mineral oil are floating on the liquid HCFC134a and flowing together with the HFC134a.

Similar to the results of the compatibility test, I confirm in the flow visualization experiment that mineral oil is immiscible to HFC134a. However, droplets of mineral oil flow with the liquid phase HFC134a where HFC134a is the liquid state. Furthermore there are no distinct difference in behavior of mineral oil between HFC134a and HCFC22 at the inlet of the compressor. Therefore, the circulation of mineral oil is confirmed at the exit of the condenser and the additional condenser and at the inlet of the compressor, even when replacing HCFC22 by HFC134a.

Cremaschi *et al*. (2005) recently evaluated the oil retention in air-conditioning systems using HFC410A and immiscible mineral oil. They proved that mineral oil circulates with HFC410A, though the amount of oil retention became larger than the polyol ester oil, which is miscible in HFC410A. This report also supports the circulation of mineral oil in the air-conditioning system with HFC134a.

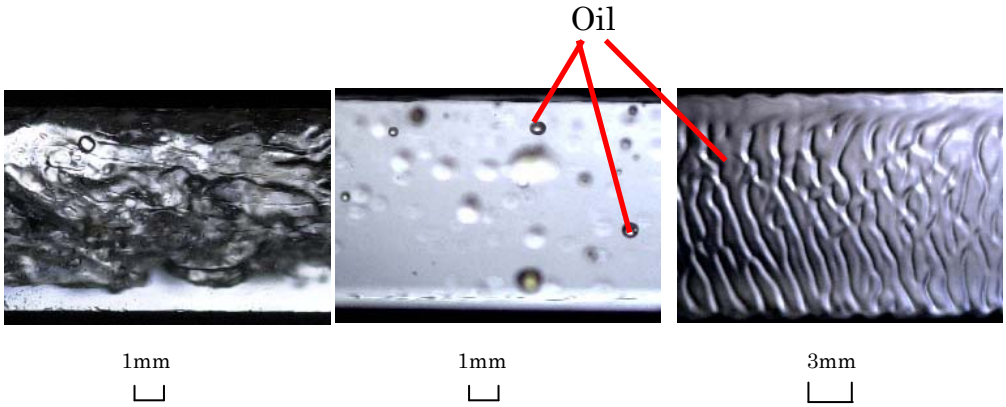

(a) Outlet of condenser (b) Outlet of additional condenser (c) Inlet of compressor

Figure 21 Flow visualization results of HFC134a and mineral oil

3.3 Extraction of Working Fluids

In this experiment, I extract refrigerant and mineral oil from the air-conditioning system being in operation and measure the quantity of mineral oil in order to confirm the existence of mineral oil in working refrigerant.

3.3.1 Experimental Method

Figure 22 shows the circuit chart of the extraction experiment. The air-conditioning system that sets up the additional condenser as well as the visualization experiment is used with the piping system with a detachable valve by which refrigerant and mineral oil are extracted. Figure 23 shows the mechanism of the four-way valve and how to extract the working fluid. As shown in Figure 23(a), the working fluid is extracted to the separation part of the piping. Then as shown in Figure 23(b), by switching the four-way valve, the separation part of the piping contained the working fluid is separated from the main part of the piping for the extraction. I extracted the working fluid at the inlet of the compressor and at the outlet of the condenser or the additional condenser. The mass of mineral oil is calculated by measuring with the electronic balance the mass of the separation part in vacuum condition, after extraction, and after evacuating gas refrigerant.

Barrel Freeze 32s is used as mineral lubricant oil (see 2.1 for physical properties). I experimented four cases (HCFC22 /HFC134a and with/without the additional condenser). The temperature of inhalation air of the indoor equipment is set to 27 ^{o}C and that of the outdoor equipment is set to35 ^{o}C.

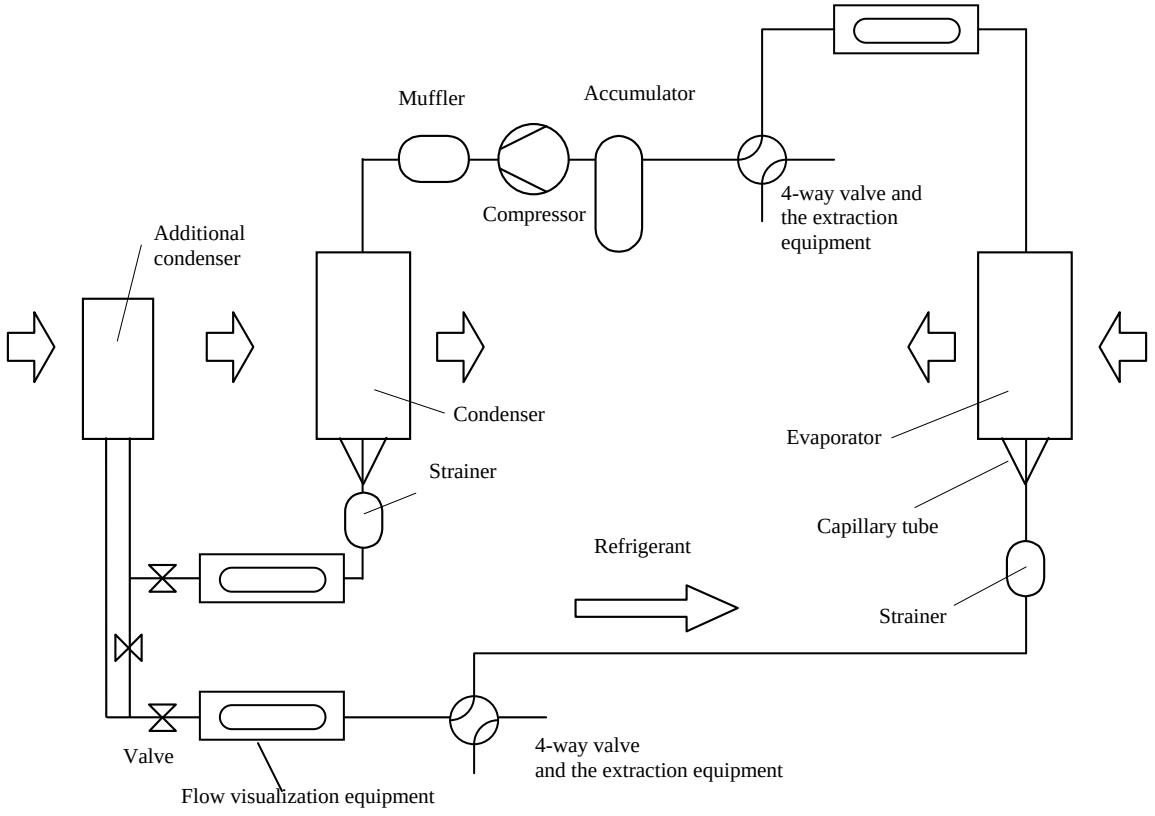

Figure 22 Circuit chart of the extraction experiment

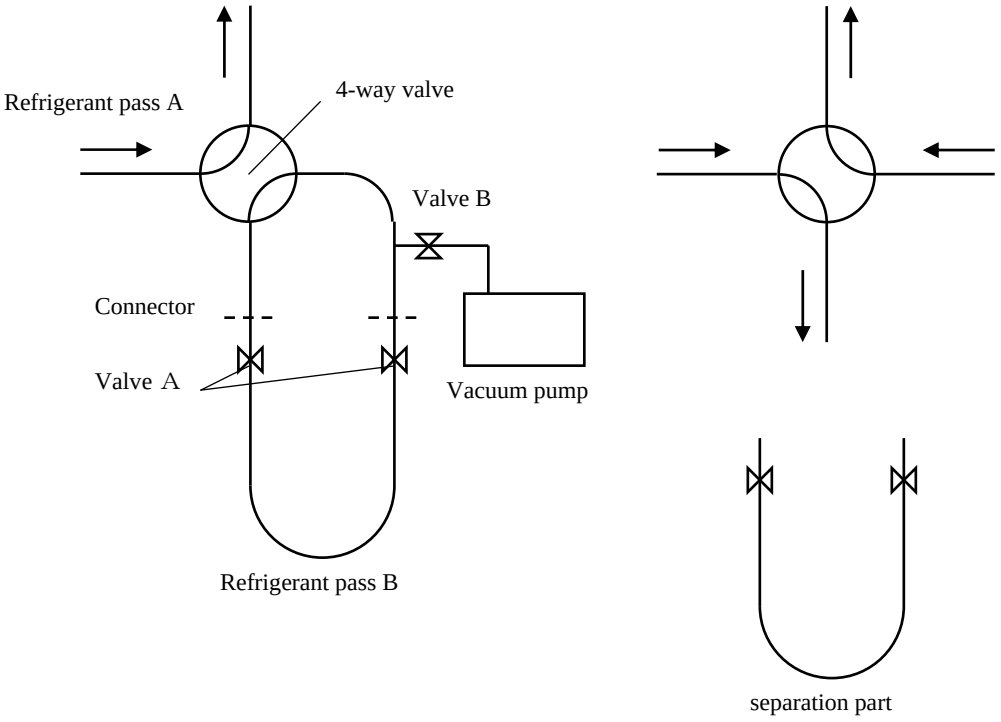

(a) Before and during the extraction

(b) After the extraction

Figure 23 Schematic diagram of the extraction equipment

3.3.2 Results and Discussion

The experimental results at the compressor inlet and at the outlet of the condenser or the additional condenser are shown in Table 7. Since the existence of mineral oil is confirmed in all cases, I conclude that mineral oil is circulating with refrigerant. However, a quantitative comparison of weights of extracted fluids of each case is difficult because of the experimental errors. The differences in mass for each refrigerant are thought to be caused by the following situations:

(1) More mineral oil is trapped for HFC134a than HCFC22 at the outlet of the condenser or the additional condenser because mineral oil attached on the tube is also trapped in the case of HFC134a to which mineral oil is immiscible.

(2) More mineral oil is trapped for HCFC22 than HFC134a at the inlet of the compressor because more mineral oil is conveyed in HCFC22 which is miscible to mineral oil.

Due to (1) and (2), more mineral oil is required for operation with HFC134a.

Above-mentioned results are summarized that the existence of mineral oil is confirmed at the inlet of the compressor and the outlet of the condenser or the additional condenser for both HCFC22 and HFC134a. Based on this and the results in the flow visualization experiment, I conclude that mineral oil is circulating during operation for both HCFC22 and HFC134a although the composition of the mixture of mineral oil and refrigerant is different in the condensed phase of each refrigerant.

Table 7 Results of extraction test

Condition	Oil weight [g]	
	Outlet of condenser / additional condenser	Inlet of compressor
HCFC22	0.16	0.49
HCFC22+AC	0.25	0.54
HFC134a	0.74	0.23
HFC134a+AC	1.00	0.30

3.4 Concluding Remarks

In this chapter, I studied the mechanism of the circulation of refrigerant and mineral lubricant oil under operation.

Firstly, I tested compatibility of refrigerant and mineral lubricant oil and confirmed the gas phase HCFC22 is miscible to mineral oil however; HFC134a is immiscible to mineral oil. Next, I visualize the circulation behavior of refrigerant and mineral lubricant oil under actual operation. Moreover, the existence of mineral lubricant oil in refrigerant is confirmed by extracting the working fluid from the piping of the air-conditioning system under operation. Obtained results are summarized as follows:

(1) From the flow visualization experiment, I confirmed that when refrigerant is liquid phase, mineral oil is miscible to HCFC22 and oil and refrigerant flow compatibly, however; immiscible to HFC134a and droplets of oil flow with refrigerant.

(2) From the extraction of working fluid, I again confirmed that mineral oil circulates throughout the air-conditioning circuit because mineral oil was extracted at the inlet of the compressor and at the outlet of the condenser or the additional condenser.

CHAPTER 4

APPLICATION: PERFORMANCE OF A HOT-WATER SUPPLY SYSTEM UTILIZING WASTED HEAT OF AN AIR-CONDITIONING SYSTEM

As stated in 1.1, our ultimate goal is to realize Eco-system by integrating three knowledge areas: philosophy, science and technology. In order to do so, proposed methodologies are generalized to be truly beneficial ones to us and our earth by extending the applicable scope.

In this chapter, I studied a desuperheater as a variation of an additional condenser to exemplify the scope of the proposed methodologies. A desuperheater was retrofit on the *legacy* air-conditioning system to supply hot water by regenerating heat rejected from air-conditioning systems instead of being discharged in the atmosphere, and performance of supplying hot water was evaluated.

HFC134a is more appropriate to apply for high temperature water heaters than HCFC22 because it has lower pressure characteristics in higher temperature region. Therefore in this research, I evaluated the effect of the quantity of charged refrigerant on performance of the

system and performance change induced by retrofitting a desuperheater (energy efficiency of heat exchange due to air-conditioning, COP, and overall energy efficiency due to both supplying hot water and air-conditioning) by adopting HFC134a as refrigerant and applying an water-cooled additional condenser as a desuperheater based on the patent of The Institute for Eco & Economy System, Inc. (2004).

4.1 Experimental Setup

The air-conditioning system made by Mitsubishi Heavy Industry (Specifications: Refrigerant: HCFC22; Compressor power output: 3.75 kW; Air-conditioning output: 14.5 kW) was used as a main experimental device. The major dimensions of the condenser (FDC125H8) are: fin pitch:1.8 mm (slit fin); heat transfer tube: inner diameter 7.94 mm × thickness 0.3 mm (bear tube), 2 arrays - 48 stages, frontal width: 832.4 mm, frontal area: 1.014 m^2, array pitch: 19.04 mm. Regarding the evaporator (FDE125H8): fin pitch: 1.6 mm (rover fin); heat transfer tube; inner diameter 9.4 mm × thickness 0.41 mm (channel tube), 3 arrays - 11 stages, frontal width; 1270 mm, frontal area: 0.355 m^2; array pitch; 19.04 mm. Regarding the capillary tube for cooling: inner diameter: 1.4 mm; length: about 400 mm.

A water-cooled additional condenser was retrofit between the compressor and condenser of the air-conditioning system as a desuperheater. Figure 24 shows the circuit chart of the experimental equipment. The mineral oil (Barrel Freeze 32s; see 2.1 for physical properties) was used for the lubricating oil of the compressor. As shown in chapter 2 and 3, it was confirmed that the air-conditioning system worked normally even if the HCFC22 was just replaced to HFC134a. In this system, the refrigerant flown out from the compressor flows into the desuperheater, condenser and evaporator in order. The valve was set between the condenser and desuperheater so that the modes could be switched to with/ without the desuperheater.

The detailed structure of the desuperheater is shown in Figure 25 and the set up configuration on the outdoor unit is shown in Figure 26. The length of the copper helicoidal tube is about 19 m and the inner diameter of the tube is 7.93 mm. The high temperature refrigerant gets cooler flowing from the upper side of the helicoidal tube to the lower side and the low temperature water gets warmer flowing from the lower side of the container to the upper side so that the heat exchange occurs through the counter flow condition.

The data are measured as follows: The outdoor unit and the indoor unit are set up in each laboratory room where the wall, ceiling, and floor are insulated. The temperature of the refrigerant is measured by T-type thermocouples attached on the tube of the compressor, condenser, desuperheater, capillary tube, and evaporator. The temperature of the air is measured by the dry and wet thermometer in each suction opening and the supply opening of the condenser and the evaporator. The pressure of the refrigerant was measured at the inlet and outlet of the compressor by the pressure gauge.

During the test, the room temperature of the indoor unit side was kept 27 ^{o}C and that of the outdoor unit side was kept 35 ^{o}C using an extra air-conditioner for room temperature adjustment. This is the performance test method of the air-conditioning equipment according as the Japanese Industrial Standards (Japanese Industrial Standards 1999, JIS B 8615-1).

The ability of cooling heat exchange was measure as follows:

Conservation of energy for air passing the evaporator is described as

$$\rho_{\mathrm{out}} V_{\mathrm{out}} h_{\mathrm{out}} = \rho_{\mathrm{in}} V_{\mathrm{in}} h_{\mathrm{in}} - q \qquad (4)$$

where q is ability of cooling heat exchange, ρ is density of air, V is volumetric flow rate, h is specific enthalpy, and suffix “in” and “out” are the conditions at the inlet and outlet of the

evaporator respectively. Since no drain was observed throughout the tests due to low humidity, conservation of mass is described as

$$\rho_{\mathrm{out}} V_{\mathrm{out}} = \rho_{\mathrm{in}} V_{\mathrm{in}} \tag{5}$$

From the equations (1) and (2), q is derived as

$$q = \rho_{\mathrm{out}} V_{\mathrm{out}} \left(h_{\mathrm{in}} - h_{\mathrm{out}} \right) \tag{6}$$

Values of specific enthalpy and density of air are derived from measured temperature, V is assumed to be constant throughout the tests. The current value and the integral of the electric power of the compressor were also measured during the test.

The hot water temperature in the desuperheater was measured by T-type sheathed thermocouples inserted into the flow field in the tube. The water temperature at the inlet of the desuperheater was kept 24℃ through the temperature controlled bath and that at the exit was kept 65℃ by adjusting the water flow rate. This is the test method for the residential heat pump water heater according as Japan Refrigeration and Air-conditioning Industry Association standard (The Japanese Refrigeration and Air-conditioning Industry Association 2005, JRA 4050).

The ability of heat exchange of the desuperheater was measured as follows:

$$q = \rho V c \left(T_{\mathrm{out}} - T_{\mathrm{in}} \right) \tag{7}$$

where ρ, is density of water, V is volumetric flow rate, c is specific heat, T is temperature and suffix “in” and “out” are the conditions at the inlet and the outlet of the desuperheater respectively.

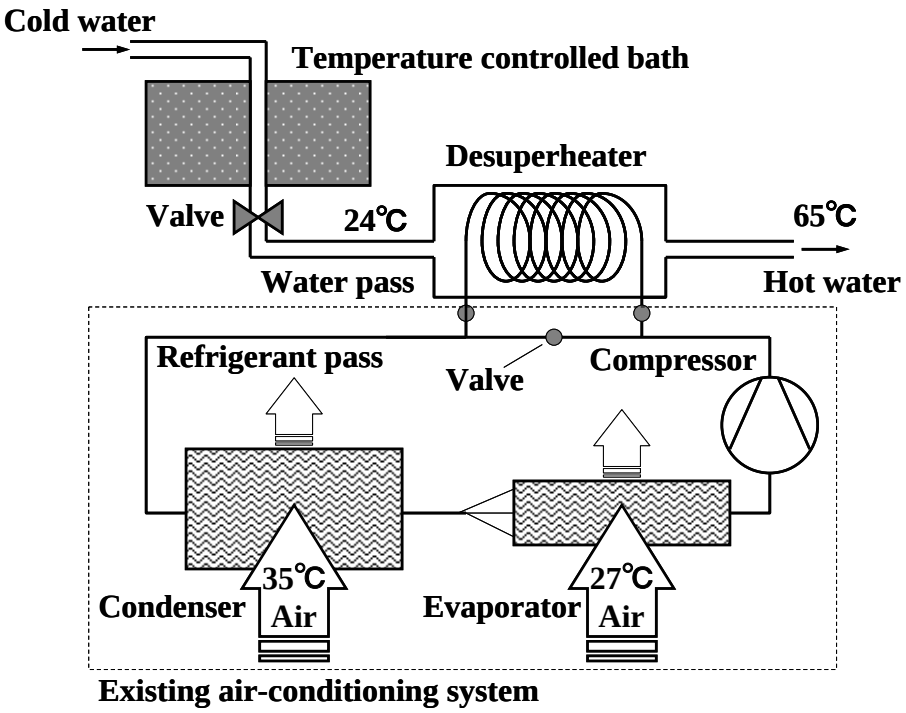

Figure 24 Circuit chart of experimental equipment

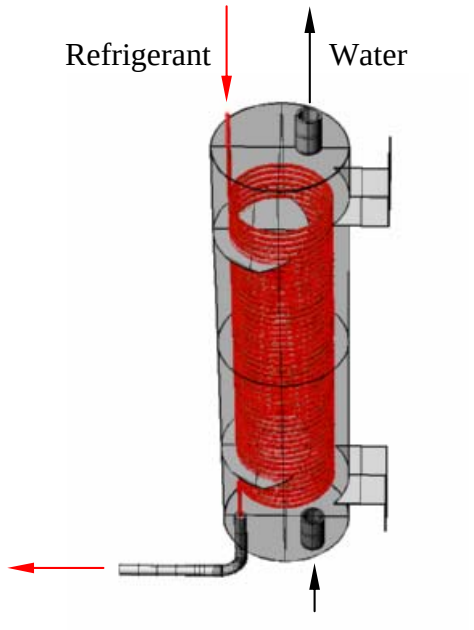

Figure 25 Schematic diagram of desuperheater

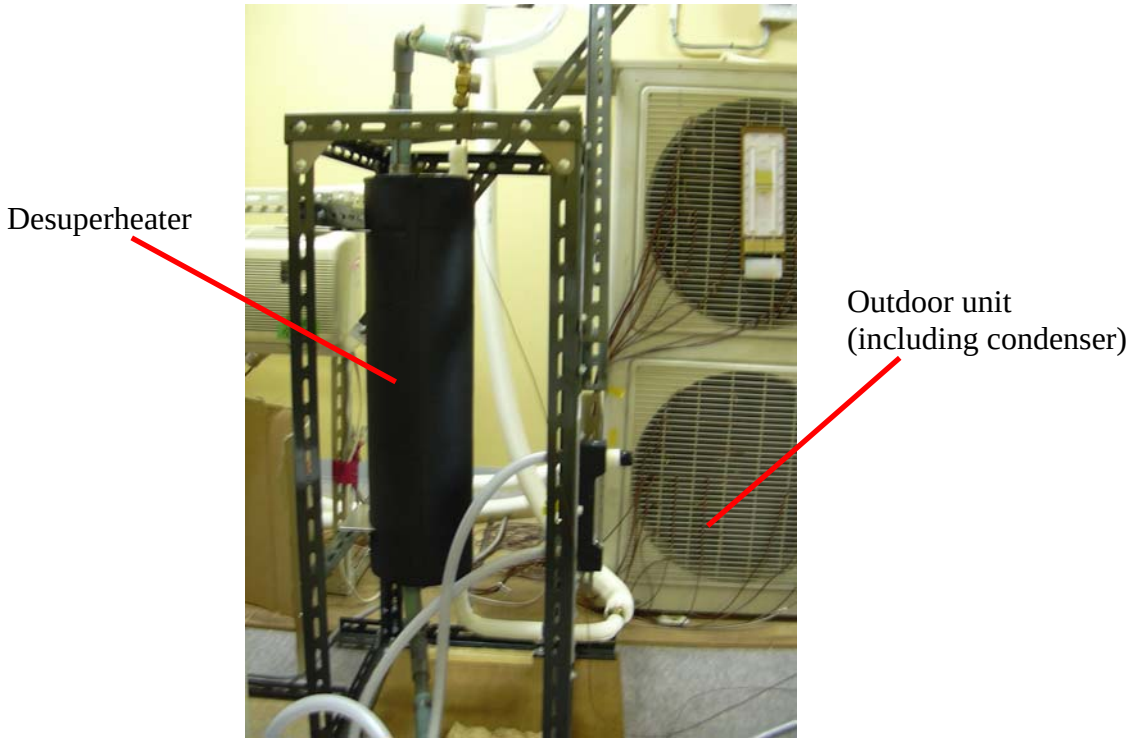

Figure 26 Setup configuration of desuperheter

4.2 Results and Discussion

Firstly, the ability of supplying hot water was evaluated by changing the quantity of the charged refrigerant from 2.5 to 4.5 kg. Figure 27 shows the relation between the quantity of the charged refrigerant and the ability of hot water supply. As the quantity of the refrigerant increases, the ability of hot water supply improves until reaching 7.53 kW in average with 4.1 kg of the refrigerant quantity. At this point, the flow rate of supplying hot water of 65 ^{o}C is 2.6 l/min in average. Beyond this point, the ability of hot water supply decreases even if the refrigerant quantity was increased.

The relation between the refrigerant quantity and the ability of air-conditioning heat exchange is shown in Figure 28 with comparison of with/without the desuperheater. The refrigerant quantity was changed from 2.5 to 4.5 kg in the case with the desuperheater and from 1.3 to 3.7 kg in the case without the desuperheater. For both cases, as the refrigerant quantity increases, the ability of air-conditioning heat exchange improves until reaching 14.2 kW with 3.7 kg of the refrigerant quantity in the case without the desuperheater and 13.6 kW with 4.1 kg in the case with the desuperheater. Beyond this point, the ability decreases for both cases.

The decrease of the ability of air-conditioning heat exchange when retrofit a desuperheater was caused by reduction of refrigerant mass flow rate due to reduction of refrigerant density at the inlet of the compressor. Observation through the sight glass at the outlet of the desuperheater showed us the refrigerant was gas-liquid two phase condition. Thus increase of required refrigerant quantities was caused by for one thing increase in the total tube volume induced by retrofitting a desuperheater and the other increase of the refrigerant density induced by reduction of refrigerant dryness inside the condenser.

The relation between the refrigerant quantity and cooling COP is shown in Figure 29 with

comparison of with/without the desuperheater. Cooling COP is defined as the ratio between an amount of cooling heat exchange and input electric power. Similarly to Figure 28 for both cases, as the refrigerant quantity increases, COP improves until reaching 3.31 in average with 3.7 kg of the refrigerant quantity in the case without the desuperheater and 2.91 in average with 4.1 kg of the refrigerant quantity in the case with the desuperheater. Beyond this point, COP decreases for both cases. It will be discussed later in this section why cooling COP is lower in the case with the desuperheater.

Figure 30 shows the relation between the refrigerant quantity and the energy efficiency. The energy efficiency is defined as the ratio between the sum of the heat exchange of both hot water supply and air-conditioning and input electric power. It is seen form Figure 30 that the energy efficiency improves as the refrigerant quantity increases until reaching 4.54 in average with 4.1 kg of the refrigerant quantity. The energy efficiency is 4.35 by averaging values at the refrigerant quantity 3.3 - 4.5 kg.

Table 8 lists the characteristics averaged by values at the refrigerant quantity 3.3 - 4.5 kg for the case with the desuperheater and 2.5 - 3.7 kg for the case without the desuperheater. It is seen from Table 8 that cooling COP of the case with the desuperheater is lower by about 15 % than that of the case without the desuperheater and the ability of the air-conditioning heat exchange is a little lower for the case with the desuperheater.

Figure 31 shows the Mollier diagram predicted from averaged temperature and pressure of the refrigerant listed in Table 8. It is seen from this figure that the amount of heat exchange per unit refrigerant charge in the evaporator is a little larger for the case with the desuperheater. However as seen in Figure 28, the ability of heat exchange in the evaporator is lower for the case with the desuperheater because the density of refrigerant gets lower at the evaporator.

Furthermore larger work needs to be done by the compressor for the case with the desuperheater due to higher temperature and pressure after compression. Thus COP decreases because of reduction in the ability of heat exchange in the evaporator and increase in the work done by the compressor.

On the other hand, it is also seen from Table 8 that the energy efficiency of the case with the desuperheater is higher by about 34% than that of the case without the desuperheater. Since the heat rejected during the air-conditioning was regenerated for supplying hot water, the energy efficiency is greatly improved by retrofitting the desuperheater. It is understood that retrofitting the desuperheater enables to improve the energy efficiency without deteriorating the performance of the air-conditioning. This indicates that supplying hot-water by regenerating heat from the air-conditioning system using the desuperheater should be the crucial key technology for energy saving of air-conditioning systems especially in the tropical area where air-conditioning systems are indispensable all the year round

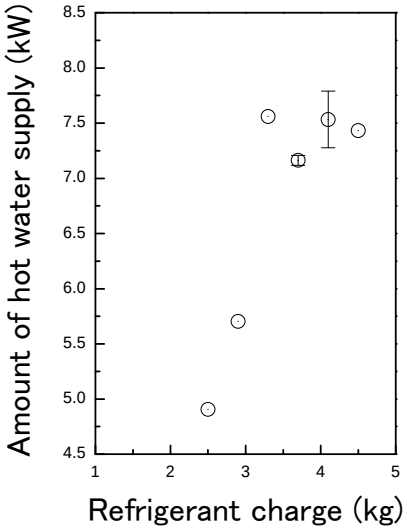

Figure 27 Variation of the ability of hot water supply for different refrigerant charges

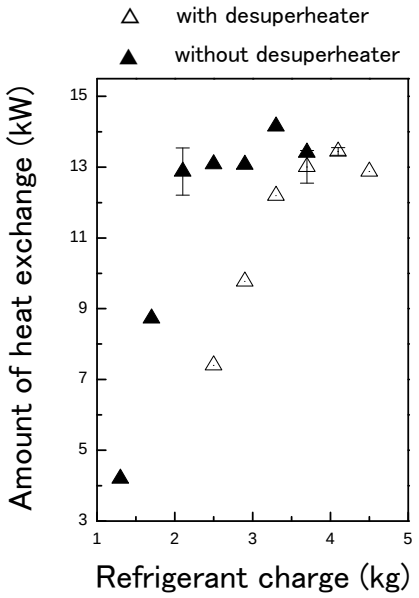

Figure 28 Variation of the ability of cooling heat exchange for different refrigerant charges

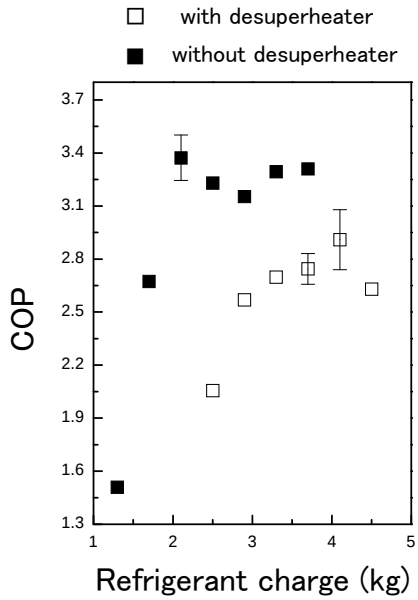

Figure 29 Variation of COP for different refrigerant charges

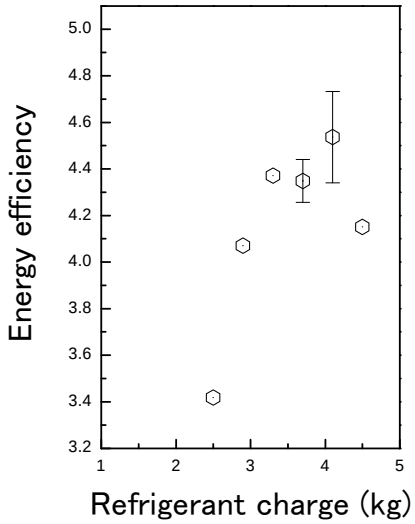

Figure 30 Variation of energy efficiency for different refrigerant charges

Table 8 Characteristics of hot-water supply system for optimal refrigerant charges

Case	Amount of hot water supply [kW] (max)	Amount of heat exchange [kW] (max)	Cooling COP (max)	Overall energy efficiency (max)	Refrigerant temperature [℃]			Refrigerant pressure [MPa]	
					Compressor		Condenser outlet	Compressor	
					Inlet	Outlet		Inlet	Outlet
Without desuperheater	—	13.4 (14.2)	3.25* (3.31)	3.25 (3.31)	9.5	71.5	41.6	0.351	1.57
With desuperheater	7.40 (7.56)	13.0 (13.6)	2.77 (3.08)	4.35 (4.73)	10.4	94.3	38.7	0.335	2.05

* The referenced catalogue value of COP = 3.87 (refrigerant: HCFC22)

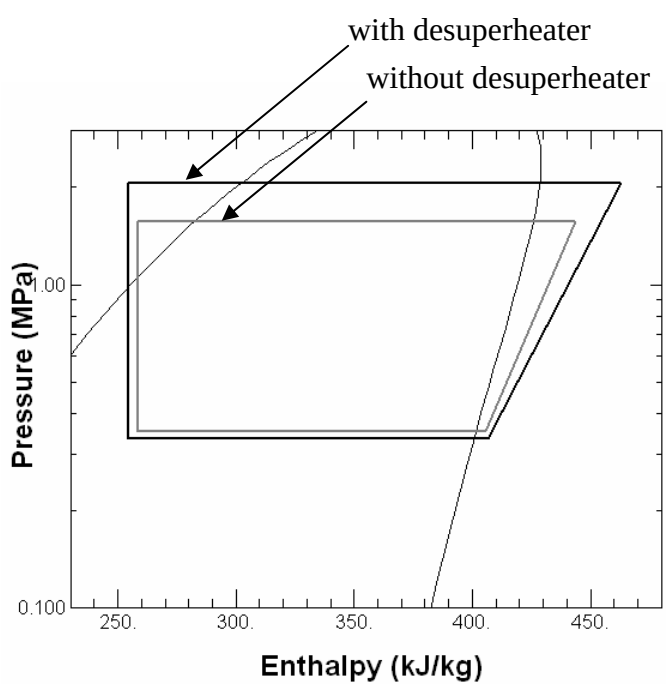

Figure 31 Mollier diagrams for optimal refrigerant charges

4.3 Concluding Remarks

In this chapter, hot water was supplied by regenerating the heat rejected from the air-conditioning system with HFC134a refrigerant by retrofitting the desuperheater on to the *legacy* air conditioning system, and the performance was evaluated. The obtained findings are listed as follows:

(1) Retrofitting a desuperheater requires an additional quantity of refrigerant for the optimal condition.

(2) The performance of heat exchange for air-conditioning is almost same for both with and without retrofitting a desuerheater at the optimal condition.

(3) COP becomes lower by about 15 % when a desuperheater is retrofit. This is because retrofitting a desuperheater requires larger work of the compressor due to higher temperature and pressure after compression.

(4) However, the energy efficiency of heat exchange including both air-conditioning and supplying hot water becomes higher by about 34 % than the case without a desuperheater. Thus I conclude that the energy efficiency of the air-conditioning system is greatly improved by supplying hot water using a retrofit desuperheater.

CHAPTER 5

CONCLUSIONS

The objectives of this study are again summarized as follows:

(1) Improving energy efficiency of *legacy* air-conditioning systems by retrofitting the additional condenser.

(2) Replacing refrigerant from HCFC22 to HFC134a in *legacy* air-conditioning systems to realize environmentally conscious ones that does not cause ozone depletion.

(3) Confirming the circulation of mineral lubricant oil in *legacy* air-conditioning systems with HFC134a.

(4) Realizing a hot-water supply system using wasted heat from the air-conditioning systems by retrofitting the additional condenser applied as desuperheater on to a *legacy* air-conditioning system and replacing refrigerant from HCFC22 to HFC134a.

In chapter 2, I examined the performance of air-conditioning systems retrofit an additional condenser to improve efficiencies of *legacy* air-conditioning systems. Further I examined the performance of *legacy* air-conditioning systems replaced HCFC22 refrigerant to HFC134a to confirm the effect of refrigerant replacement. Obtained results are as follows:

(1) Retrofitting an additional condenser on to *legacy* air-conditioning systems makes COP improved and consumed energy saved.

(2) Replacing refrigerant from HCFC22 to HFC134a causes no problems to *legacy* air-conditioning systems retrofit additional condensers even if mineral lubricant oil was used as it is. The system works normally even with higher COP and does not stop even when the outside temperature goes beyond 50 ℃.

Thus I conclude that proposed methodologies are validated.

In chapter 3, I studied the mechanism of the circulation of refrigerant and mineral lubricant oil under operation.

Firstly, I tested compatibility of refrigerant and mineral lubricant oil and confirmed the gas phase HCFC22 is miscible to mineral oil however; HFC134a is immiscible to mineral oil. Next, I visualize the circulation behavior of refrigerant and mineral lubricant oil under actual operation. Moreover, the existence of mineral lubricant oil in refrigerant is confirmed by extracting the working fluid from the piping of the air-conditioning system under operation. Obtained results are summarized as follows:

(1) From the flow visualization experiment, I confirmed that when refrigerant is liquid phase, mineral oil is miscible to HCFC22 and oil and refrigerant flow compatibly, however; immiscible to HFC134a and droplets of oil flow with refrigerant.

(2) From the extraction of working fluid, I confirmed that mineral oil circulates throughout the air-conditioning circuit because mineral oil was extracted at the inlet of the compressor and at the outlet of the condenser or the additional condenser.

In chapter 4, hot water was supplied by regenerating the heat rejected from the air-conditioning system with HFC134a refrigerant by retrofitting the desuperheater on to the *legacy* air conditioning system, and the performance was evaluated. The obtained findings are listed as follows:

(1) Retrofitting a desuperheater requires an additional quantity of refrigerant for the optimal condition.

(2) The performance of heat exchange for air-conditioning is almost same for both with and without retrofitting a desuerheater at the optimal condition.

(3) COP becomes lower by about 15 % when a desuperheater is retrofit. This is because retrofitting a desuperheater requires larger work of the compressor due to higher temperature and pressure after compression.

(4) However, the energy efficiency of heat exchange including both air-conditioning and supplying hot water becomes higher by about 34 % than the case without a desuperheater. Thus I conclude that the energy efficiency of the air-conditioning system is greatly improved by supplying hot water using a retrofit desuperheater.

Finally I will make some comments to close the study :

(1) Although the proposed methodologies have been tested using a couple of models of *legacy* air-conditioning systems, they should be applicable to any *legacy* air-conditioning systems as long as the circulation of lubricant oil is assured.

(2) Although only one case of application of proposed methodologies has been studied and validated, further generalization need be studied to cover the science and even philosophy area in addition to technology one (see 1.1).

BIBLIOGRAPHY

Cremaschi, L., Hwang, Y. and Radermacher, R. 2005, Experimental investigation of oil retention in air conditioning systems, International Journal of Refrigeration, Vol. 28, pp. 1018-1028.

Dang, C. *et al.* 2006, Flow visualization of supercritical carbon dioxide entrained with small amount of lubricant oil, The 3rd Asian Conference on Refrigeration and Air-conditioning, pp. 235-238.

Fukuta, M. *et al.* 1997, Transient mixing characteristics of refrigerant with refrigeration oil (in Japanese), Trans. of the JSRAE, Vol. 14, No. 1, pp. 75-85.

Fukuta, M. *et al.* 2003, Influences of miscible and immiscible oils on flow characteristics through capillary tube, part I: experimental study, Int. J. Refrig., Vol. 26, pp. 823-829.

Goto. M. *et al.* 2005, Performance of air conditioning system with an additional condenser using HCFC22 and HFC134a, International Symposium on Eco Topia Science 2005, pp. 131-134.

Goto. M. *et al.* 2006a, Operation of air-conditioning machine with an additional condenser (in Japanese), Trans. JSME, B, Vol. 72, No. 716, pp. 243-250.

Goto. M. *et al.* 2006b, Characteristics of air conditioning systems with an additional condenser, The 3rd Asian Conference on Refrigeration and Air-conditioning, pp. 23-27.

Goto. M. *et al.* 2007a, Circulation mechanism of immiscible mineral lubricant oil in an air conditioning machine charged with HFC refrigerant (in Japanese), Trans. JSME, B, Vol. 73, No. 725, pp. 291-297.

Goto. M. *et al.* 2007b, A energy saving methodology for legacy air-conditioning systems -

Performance of an additional condenser and its application to a hot-water supply, International Symposium on Eco Topia Science 2007, pp. 255-259.

Goto. M. *et al.* 2007, Performance evaluation of a hot-water supply system utilizing wasted heat of an air-conditioning machine (in Japanese), Trans. JSME, B Vol. 73, No. 736, pp. 2552-2556.

Ishiwatari, K. 2001, Practice on the Refrigeration and Air Conditioning (in Japanese), Ohmu-sha, pp. 21-23.

Japanese Center for Promotion of Refrigerant Collection 2002, Technologies on Collection and Processing of Refrigerant (in Japanese), pp. 10.

Japanese Industrial Standards 1999, Non-ducted air conditioners and heat pumps - Testing and rating for performance, JIS B 8615-1.

Japanese Ministry of Environment 2003, White Paper of Environment (in Japanese), pp. 97.

Kataoka, O. 2002, Commercialization of Non-Fluorinated Refrigerant, Proc. on Int. Symp. on HCFC Alternative Refrigerants and Environmental Technology, Kobe, pp. 75-80.

Kato, T. 1985, Selecting and proper handling of refrigeration oils (in Japanese), Refrigeration, Vol. 60, No. 694, pp. 810-815.

Lee, A. H. W. and Jones, J. W. 1996a, Thermal performance of a residential desuperheater/ water heater system, Energy Convers. Mgmt., Vol. 37, No. 4, pp. 389-397.

Lee, A. H. W. and Jones, J. W. 1996b, Laboratory performance of an ice-on-coil, thermal-energy storage system for residential and light commercial applications, Energy ,Vol. 21, No. 2, pp. 115-130.

McMullan, J. T. 2002, Refrigeration and the environment-issues and strategies for the future, International Journal of Refrigeration, Vol. 25, pp. 89-99.

Mikami, T. 2004, Future direction and political affect ion of the study of heat island phenomena (in Japanese), Tenki, Vol. 51, No. 2, pp. 118-122.

Nishizawa. J, Ueno. I. 2005, A Challenge to the Devil's cycle - CO2 generator was hidden in the earth system (in Japanese), Toyokeizaishinpousha, pp. 219-227.

Noguchi, M and Enjo., N. 1985, Refrigerant and lubricating oil (in Japanese), Refrigeration, Vol. 60, No. 694, pp. 816-822.

Ohguri, Y. 1999, Heat Pump Type Air Conditioner, US Patent No.5937669, August 19.

Ohsumi, K. 1999, Theory on the Refrigeration (in Japanese), Ohmu-sha, pp. 84-85.

Sekiya, A. 2002, Realization of continual developing society and refrigerant evaluation (in Japanese), Heisei 14 seminar of Japan Society of Refrigeration and Air Conditioning Engineers, pp. 515.

The Heat Pump and Thermal Technology Center of Japan 2004, Non-Fron technologies (in Japanese), Ohmu-sha, pp. 39 and pp. 136.

The Institute for Eco & Economy System, Inc. 2004, Hot water takeout method by heat pump, PCT/JP2004/013496, September 9.

The Japanese Refrigeration and Air Conditioning Industry Association 2005, Residential heat pump water heaters, JRA 4050.